Rev	AWO #	Description	Date	Appr
-		RELEASED	4/29/05	

APPROVED: _____

DATE: _____ TITLE: _____

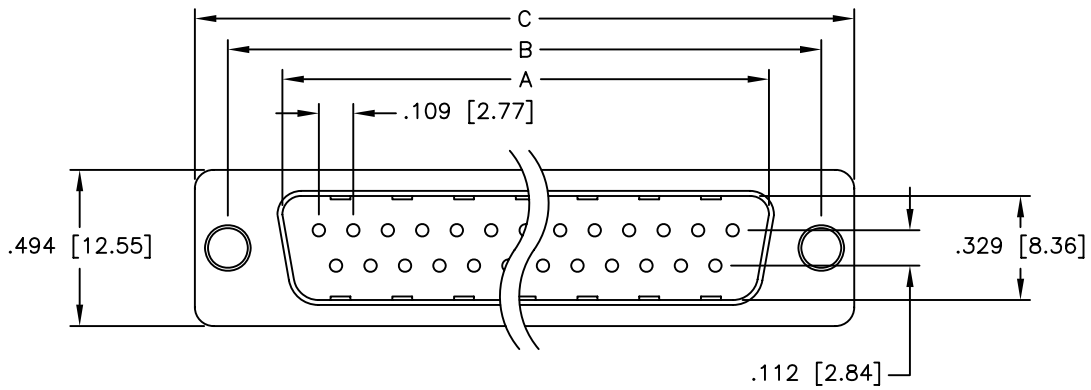

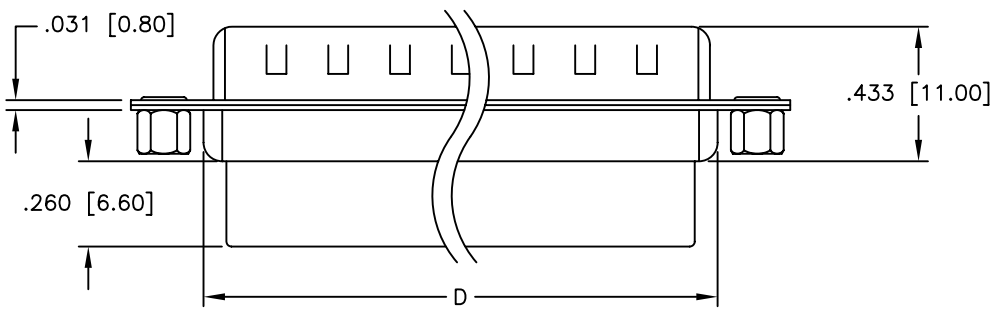

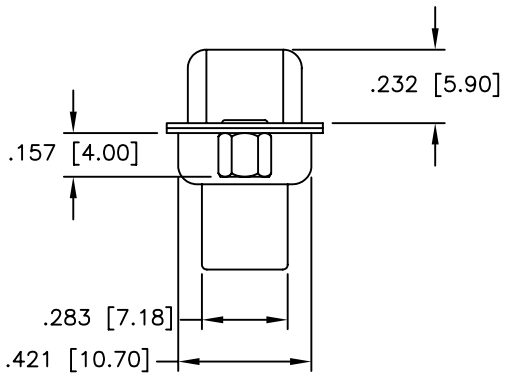

SPECIFICATIONS:
Material:
Insulator: PBT, glass reinforced, rated UL 94V–0
Insulator color: Black
Contacts: Phosphor Bronze
Shell: Steel, Tin plated
Hardware: Brass, Nickel plated
Plating:
Gold flash over Nickel underplate overall
Electrical:
Operating voltage: 250 VAC max
Current rating: 5 Amps max
Contact resistance: 20 mohms max
Insulation resistance: 5,000 Mohms min
Dielectric withstanding voltage: 1,000 VAC for 1 minute
Temperature Rating:
Operating temperature: −65˚C to +125˚C
Environmental:
Lead free, RoHS compliant

RoHS COMPLIANT

DXXX	NO. OF CONTACTS	DIMENSIONS			
		A	B	C	D
DE09	9	.666 [16.92]	.984 [24.99]	1.213 [30.81]	.759 [19.28]
DA15	15	.994 [25.25]	1.312 [33.32]	1.541 [39.14]	1.091 [27.70]
DB25	25	1.534 [38.96]	1.852 [47.04]	2.088 [53.04]	1.618 [41.10]
DC37	37	2.182 [55.42]	2.500 [63.50]	2.729 [69.32]	2.256 [57.30]

UNLESS OTHERWISE SPECIFIED
ALL DIMENSIONS ARE INCHES [MM]
TOLERANCES: EXCEPT AS NOTED

INCHES		HOLES	
.X	± .10	Ø.X	±.10
.XX	± .020	Ø.XX	±.015
.XXX	± .015	Ø.XXX	±.010

APPROVALS		DATE
DRAWN	SS	4/29/05
CHECKED		
APPROVED		

ADAM TECH
909 Rahway Avenue, Union, NJ 07083
Phone: 908-687-5000 Fax: 908-687-5710

TITLE
D-SUB PLUG, CRIMP AND POKE
RIVETED #4-40 CLINCH NUTS

SIZE	PART NO.	REV.
X	DXXX-PR-SL	-

REF: | SCALE: NTS | SHEET 1 OF 1