Rev	AWO #	Description	Date	Appr
-		RELEASED	3/11/10	
A		REVISED DIM. & SPEC.	5/2/13	

APPROVED: _____

DATE: _____ TITLE: _____

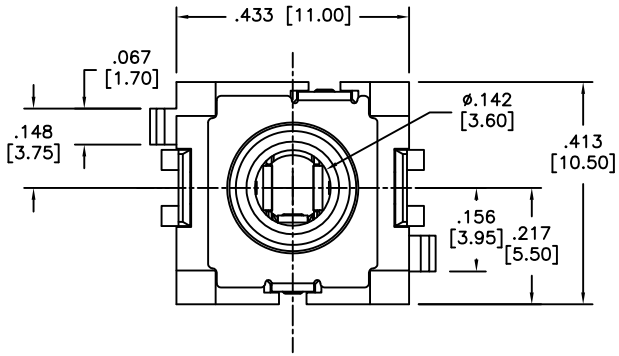

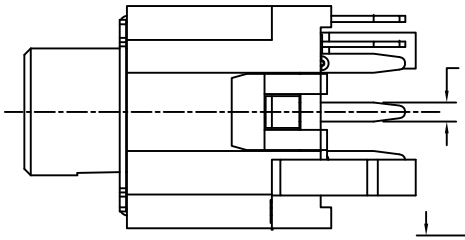

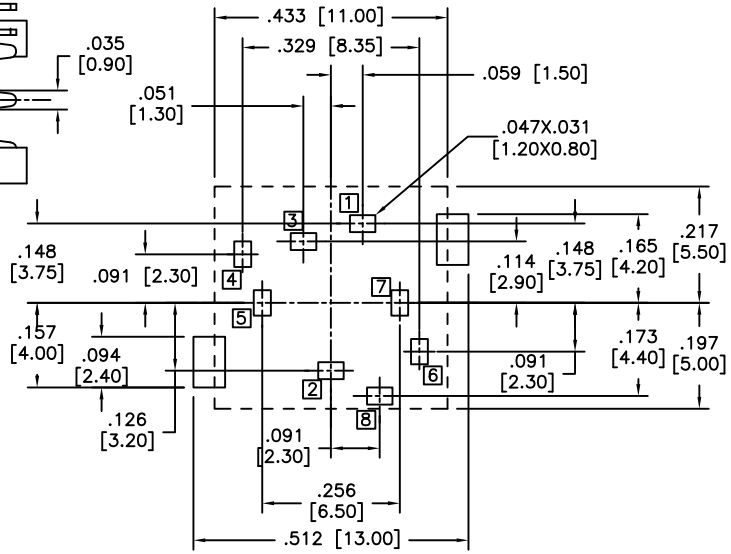

RECOMMENDED PCB LYAOUT
(Printed-sided view)

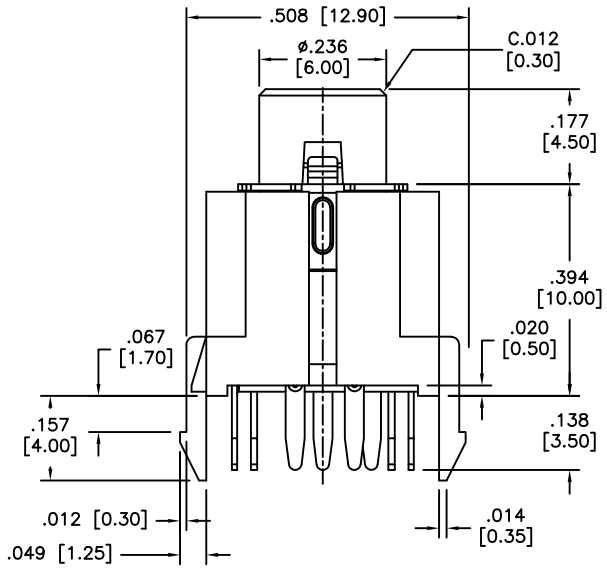

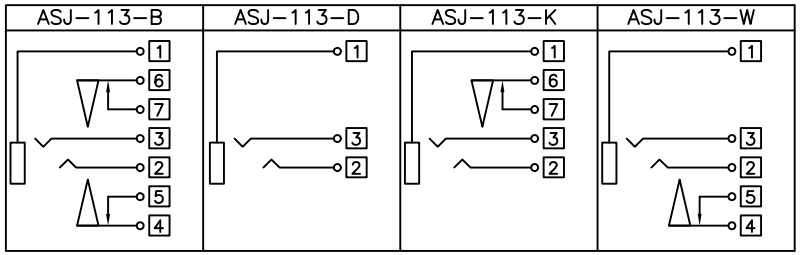

SPECIFICATIONS:
Material:
Housing: PBT, rated UL 94V-0
Housing color: Black
Insulator: POM, rated UL 94V-HB, color: Black
Cover: PC, rated UL 94V-2, color: Black
Contacts: Copper Alloy
Shield flake: SPCC, Tin plated
Plating:
Tin over Copper underplate
Electrical:
Operating voltage: 30 VDC max.
Current rating: 0.5 Amp max.
Contact resistance: 30 mohms max.
Insulation resistance: 100 Mohms min.
Dielectric withstanding voltage: 500 VAC for 1 minute
Temperature Rating:
Operating temperature: -20°C to +70°C
Environmental:
Lead free, RoHS compliant.

RoHS COMPLIANT

UNLESS OTHERWISE SPECIFIED
ALL DIMENSIONS ARE INCHES [MM]
TOLERANCES: EXCEPT AS NOTED

INCHES		HOLES	
.X	± .10	Ø.X	±.10
.XX	± .020	Ø.XX	±.015
.XXX	± .015	Ø.XXX	±.010

APPROVALS		DATE
DRAWN	DY	3/11/10
CHECKED		
APPROVED		

ADAM TECH
909 Rahway Avenue, Union, NJ 07083
Phone: 908-687-5000 Fax: 908-687-5710

TITLE
STEREO PHONE JACK, 3.5mm

SIZE	PART NO.	REV.
X	ASJ-113-X	A

REF: S00002C | SCALE: NTS | SHEET 1 OF 1