APPROVED: _____

DATE: _____ TITLE: _____

Rev	AWO #	Description	Date	Appr
-		RELEASED	4/10/06	
A		REDRAWN	8/24/09	
B		ENGINEERING CHANGE NOTICE	6/23/10	

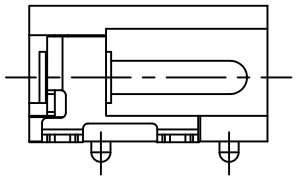

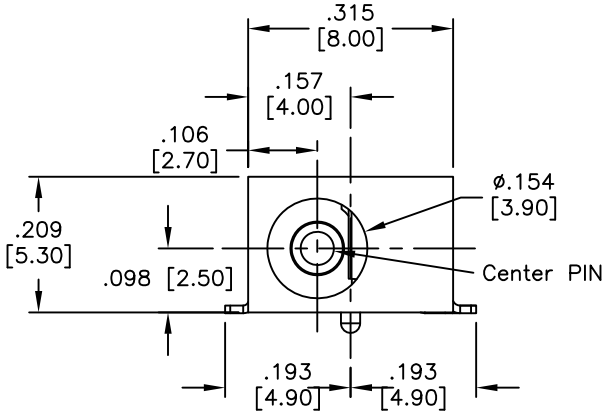

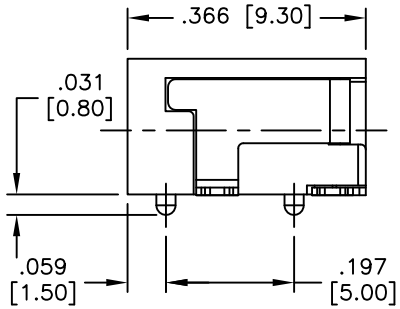

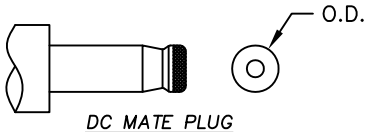

DC MATE PLUG

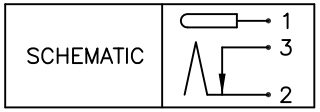

PACKAGED ON TAPE & REEL

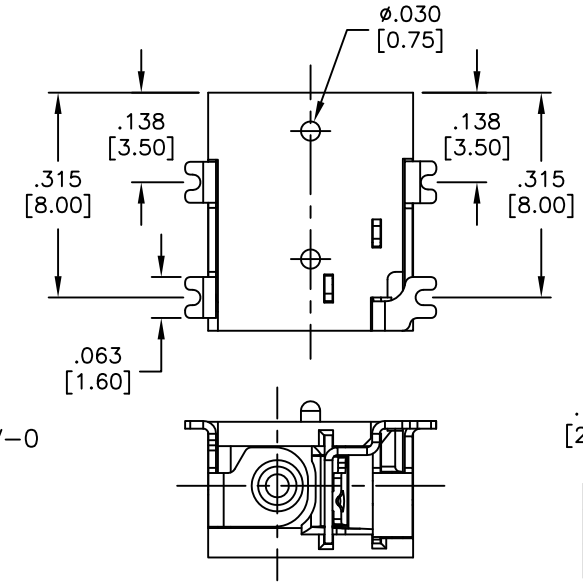

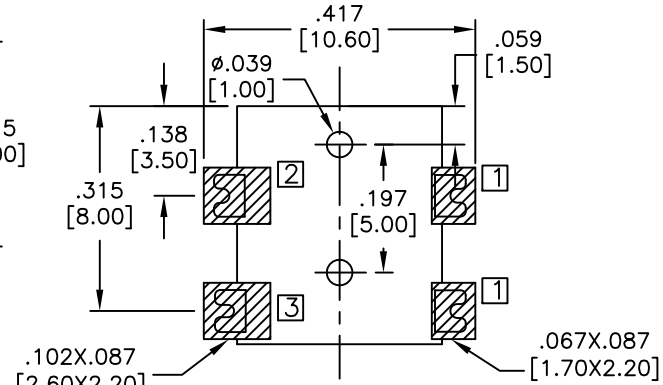

RECOMMENDED PCB LAYOUT

PART NO.	CENTER PIN DIA.	DC PLUG O.D.
ADC-021-3-T/R	.039 [1.00]	ø.138 [3.50]
ADC-021-4-T/R	.051 [1.30]	ø.138 [3.50]

SPECIFICATIONS:

Material:

Insulator: Hi-Temp thermoplastic, rated UL 94V-0

Insulator color: Black

Center Pin: Brass, Nickel plated

Contacts: Copper Alloy

Plating:

Silver over Nickel underplate

Electrical:

Operating voltage: 18 VDC max.

Current rating: 3 Amp max.

Contact resistance: 30 mohms max. initial

Insulation resistance: 100 Mohms min.

Dielectric withstanding voltage: 500 VAC for 1 minute

Temperature Rating:

Operating temperature: -25°C to +70°C

Environmental:

Lead free, RoHS compliant

RoHS COMPLIANT

UNLESS OTHERWISE SPECIFIED
ALL DIMENSIONS ARE INCHES [MM]
TOLERANCES: EXCEPT AS NOTED

INCHES		HOLES	
.X	± .10	Ø.X	±.10
.XX	± .020	Ø.XX	±.015
.XXX	± .015	Ø.XXX	±.010

APPROVALS		DATE
DRAWN	LFJ	4/10/06
CHECKED		
APPROVED		

ADAM TECH

909 Rahway Avenue, Union, NJ 07083

Phone: 908-687-5000 Fax: 908-687-5710

TITLE

DC POWER JACK, 1.00mm, 1.30mm CENTER PIN

SIZE	PART NO.	REV.
X	ADC-021-X-T/R	B

REF: S00002C | SCALE: NTS | SHEET 1 OF 1