Skywire 4G LTE Cat M1 with GNSS Embedded Cellular Modem Datasheet

NimbeLink Corp

Updated: January 2022

© NimbeLink Corp. 2022. All rights reserved.

NimbeLink Corp. provides this documentation in support of its products for the internal use of its current and prospective customers. The publication of this document does not create any other right or license in any party to use any content contained in or referred to in this document and any modification or redistribution of this document is not permitted.

While efforts are made to ensure accuracy, typographical and other errors may exist in this document. NimbeLink reserves the right to modify or discontinue its products and to modify this and any other product documentation at any time.

All NimbeLink products are sold subject to its published Terms and Conditions, subject to any separate terms agreed with its customers. No warranty of any type is extended by publication of this documentation, including, but not limited to, implied warranties of merchantability, fitness for a particular purpose and non-infringement.

NimbeLink is a registered trademark, and Skywire is a registered trademark, of NimbeLink Corp. All trademarks, service marks and similar designations referenced in this document are the property of their respective owners.

Table of Contents

Table of Contents **2**

Introduction **4**
- Scope 4
- Contact Information 4
- Orderable Part Numbers 4
- Additional Resources 4
- Product Overview 5

Technical Specifications **5**
- Block Diagram 5
- Electrical Specifications 6
  - Absolute Maximum Ratings 6
  - Module Pinout for Connectors J1 and J2 6
  - Modem Pinout for Connectors J3, X1, X3 8
- Typical Power Consumption 9
    - Measurement Setup 9
    - NL-SW-LTE-TG1WWG Power Consumption 9
- RF Specifications 11
  - Maximum RF Output Power 11
  - Uplink and Downlink Speeds 12
- Mechanical Characteristics 12
  - Mechanical Specifications 12
  - Mating Connectors 13
  - Mechanical Drawing 13
  - Device Placement 14
- Environmental Specifications 14

Design Considerations **15**
- Power Supply Design 15
  - Power Supply Requirements 15
  - Power Supply Design Guidelines 16
- Serial Communications 17
  - Serial UART Interface 17
  - USB Interface 18
- VREF 18

 © NimbeLink Corp. 2022. All rights reserved.

nRESET 18
Power Control 19
ON_OFF Signal 19
Shutdown 20
ON/nSLEEP 20
Firmware Updates Over the Air (FOTA) 21
Soldered-Down SIM 21
Multi-Image Firmware Information 22
Overview 22
AT#FWSWITCH Command Syntax 22
Selecting the AT&T Firmware Configuration 23
Selecting the Verizon Firmware Configuration 23
GNSS 24
GNSS Antenna Requirements 24
GNSS Receiver and LDO Control 24
GNSS Antenna Placement 25
Cellular Antenna Requirements 26
Primary Antenna Requirements 26
Antenna Placement 27
Recommended Antennas 27
Skywire Reference Design 28

Mounting Guidelines 28
Board-to-Board Connectors Approach 28
Mechanical Retention 29
Solder-to-Board Connection 29

Regulatory information 31
FCC & IC Compliance 31
Regulatory Certifications 31
Carrier Specific Certifications 31
Export Control Classification Number (ECCN) 32
RoHS Compliance 32
Interference Statement 32
Wireless Notice 33
Modification Statement 34
End Product Labeling Requirements 34

Document Version Information 35

 © NimbeLink Corp. 2022. All rights reserved.

1. Introduction

1.1 Scope

This document serves as the hardware datasheet for the NL-SW-LTE-TG1WWG Skywire® modem. This document is updated often, please be sure to download the latest version from NimbeLink's website.

1.2 Contact Information

NimbeLink's goal is to make integrating the Skywire modem into customer products as easy as possible. Please send any feedback, documentation requests, or technical support questions to Nimbelink's product support team at:

product.support@nimbelink.com

For information regarding purchasing Skywire modems, please visit the "Part Ordering Information" section on the modem's product page. Any additional sales questions or requests for quotation can be directed to NimbeLink's sales team at:

sales@nimbelink.com

1.3 Orderable Part Numbers

Orderable Device	Operating Temp	2G Fallback	4G Bands	Carrier	Wireless Tech.
NL-SW-LTE-TG1WWG	-40˚C to +85˚C	B2, B3, B5, B8	B1, B2, B3, B4, B5, B8, B12, B13, B18, B19, B20, B25, B26, B27, B28, B66, B71, B85	Global	4G LTE, 2G, GNSS

1.4 Additional Resources

The bulleted list below contains other useful resources for the NL-SW-LTE-TG1WWG family of Skywire modems:

- NL-SW-LTE-TG1WWG AT Command Manual
- NL-SWDK Product Page
- NL-SWDK User Manual
- NL-SWDK2 Product Page
- NL-SWDK2 User Manual

© NimbeLink Corp. 2022. All rights reserved.

1.5 Product Overview

The Skywire LTE Cat M1 embedded modem with GNSS is purpose-designed for IoT applications - particularly those requiring location-based functionality. This Skywire has full FCC and carrier end-device certifications, which can save users months of testing and tens of thousands of dollars in cost. The NL-SW-LTE-TG1WWG Skywire family is compatible with a range of Skywire development kits and microprocessor shields to help accelerate product development and prototyping.

LTE CAT M1 modems have the lowest power requirements of any cellular modem type, making them ideal for battery operated, mobile, or off-grid applications. Depending on the application they may be able to run for years unattended and without requiring a battery replacement or recharge.

2. Technical Specifications

2.1 Block Diagram

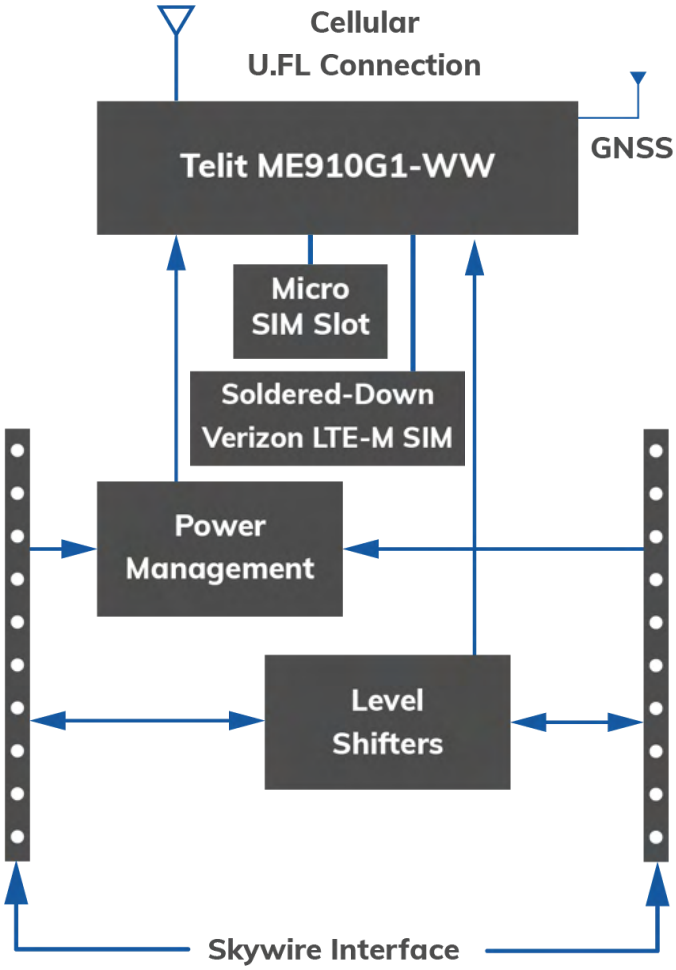

 © NimbeLink Corp. 2022. All rights reserved.

2.2 Electrical Specifications

2.2.1 Absolute Maximum Ratings

Parameter	Signal	Minimum Rating	Maximum Rating
Main Power Supply	VCC	3.4V	4.2V
I/O Voltage Reference	VREF	1.65V	5.5V

2.2.2 Module Pinout for Connectors J1 and J2

The following table details the pinout of the NL-SW-LTE-TG1WWG and recommended ratings for the Skywire interface on connectors J1 and J2. Further details and design requirements for these pins are documented in Section 3.

Pin	Name	Type	Description		Min	Typ.	Max
1 (J1-1)	VCC	Input	Main power supply input. Must be implemented.		3.4V	3.8V	4.2V
2 (J1-2)	DOUT	Output	UART data out, I/O level tied to VREF. Must be implemented if USB is unused. Otherwise, leave unconnected if unused.		0V		VREF
3 (J1-3)	DIN	Input	UART data in, I/O level tied to VREF. Must be implemented if USB is unused. Tie to GND with a 1k resistor if unused.	VREF Range	VIL		VIH
				1.65V to 1.95V	VREF x 0.35V		VREF x 0.65
				2.3V to 2.7V	0.7V		1.7V
				3.0V to 3.6V	0.8V		2V
				4.5V to 5.5V	VREF x 0.3V		VREF x 0.7
4 (J1-4)	GND	Input	Ground Pin. Must be implemented.			0V	
5 (J1-5)	nRESET	Input	Modem reset signal. Must be driven with an open-drain output and should never be driven high. Leave unconnected if unused.		0V		VCC
6 (J1-6)	VUSB	Input	USB connection detection. Leave unconnected if the USB interface is unused.		3.0V	5.0V	5.5V

© NimbeLink Corp. 2022. All rights reserved.

Pin	Name	Type	Description		Min	Typ.	Max
7 (J1-7)	USB_P	I/O	USB positive differential data signal. Requires differential impedance of 90Ω. Leave unconnected if the USB interface is unused.		Compliant with USB 2.0 standard specification.		
8 (J1-8)	USB_N	I/O	USB differential data bus (-) Requires differential impedance of 90Ω. Leave unconnected if the USB interface is unused.		Compliant with USB 2.0 standard specification.		
9 (J1-9)	DTR	Input	Data terminal ready signal (sleep mode control), tied to internal reference voltage of 1.8V. Should be tied to GND with 1k pull down resistor.	VIL	0V		0.63V
				VIH	1.17V		5.5V
10 (J1-10)	GND	Input	Ground Pin. Must be implemented.			0V	
11 (J2-1)	GND	Input	Ground Pin. Must be implemented.			0V	
12 (J2-2)	CTS	Output	Clear To Send hardware flow control signal. Leave unconnected if unused.		0V		VREF
13 (J2-3)	ON/ nSLEEP	Output	Modem status pin. See Section 3.6 for further information.		0V		1.8V
14 (J2-4)	VREF	Input	Voltage reference for offboard I/O signals. Must be implemented.		1.65V	1.8V or 3.3V	5.5V
15 (J2-5)	GND	Input	Ground Pin			0V	

© NimbeLink Corp. 2022. All rights reserved.

Pin	Name	Type	Description		Min	Typ.	Max
16 (J2-6)	RTS	Input	Modem "Request to Send" hardware flow control input. Tie to ground with a 1k ohm resistor if not used.	VREF Range	VIL		VIH
				1.65V to 1.95V	VREF x 0.35V		VREF x 0.65
				2.3V to 2.7V	0.7V		1.7V
				3.0V to 3.6V	0.8V		2V
				4.5V to 5.5V	VREF x 0.3V		VREF x 0.7
17 (J2-7)	GPIO_3	I/O	Modem GPIO pin. 1 mA drive strength. Internally pulled-down with 100k resistor.		0V		1.8V
18 (J2-8)	GPIO_2	I/O	Modem GPIO pin. 1 mA drive strength. Internally pulled-down with 100k resistor.		0V		1.8V
19 (J2-9)	RING	Output	Modem Ring indicator pin. Open drain output, pulled up to VREF on Skywire. Pulled low when a new modem URC is available.		0V		VREF
20 (J2-10)	ON_OFF	Input	Modem On/Off signal, active low, drive with an open collector transistor. See Section 3.5.1 for additional requirements.		0V		1.8V

2.2.3 Modem Pinout for Connectors J3, X1, X3

Connector Designator	Description	Connector Location
J3	Micro SIM Connector	Bottom Side of Module
X1	Primary Cellular Antenna Connector	Top Side of Module
X3	GNSS Receiver Antenna Connector	Bottom Side of Module

© NimbeLink Corp. 2022. All rights reserved.

2.2.4 Typical Power Consumption

The values contained in Section 2.2.4 are provided as an example of typical current consumption behavior for NL-SW-LTE-TG1WWG Skywires. In customer applications, current consumption may vary, and is influenced by factors such as: signal quality, ambient temperature, battery/supply voltage, supply impedance, board capacitance, and other factors.

2.2.4.1 Measurement Setup

The power data was collected using a DC energy analyzer in series with the modem's VCC pin, and an NL-SWDK with the following setup:

VCC Voltage	VREF Voltage	USB	UART
3.8V	3.3V	Not Connected	Connected to PC

2.2.4.2 NL-SW-LTE-TG1WWG Power Consumption

Mode	RSRP	RSRQ	Peak Current	Avg. Current	Total Charge	Notes
Socket Dial, 4G LTE	-87 dBm (No atten.)	-11.5 dB	311 mA	66.9 mA	224 µAh	**Time Elapsed:** 12.1 seconds **Test:** Power on, register, open socket, HTTP POST, read response, close socket, detach, power down
	-107 dBm (20 dB atten.)	-11.5 dB	804 mA	82.7 mA	289 µAh	
GPS Fix, Cold Start	-	-	91.6 mA	70.9 mA	846 µAh	**Time Elapsed:** 43 seconds **Test:** GPS cold start, active GPS antenna, not registered to LTE network, time-to-fix measurement
GPS Fix, Hot Start	-	-	77.8 mA	70.9 mA	9.84 µAh	**Time Elapsed:** 0.5 seconds **Test:** GPS hot start, active GPS antenna, not registered to LTE network, time-to-fix measurement
Idle, Registered on Network	-100 dBm	-8 dB	69.7 mA	10.5 mA	349 µAh	**Time Elapsed:** 120 seconds **Test:** 2 minute idle, modem registered, status LED disabled
Idle, Registered on Network, Low Power Mode	-100 dBm	-8 dB	25.7 mA	823 µA	27.4 µAh	**Time Elapsed:** 120 seconds **Test:** 2 minute idle, modem registered, `+CFUN: 5` mode, DTR tied to VREF (i.e UART disabled), status LED disabled
PSM	-100 dBm	-8 dB	38.9 µA	3.08 µA	103 nAh	**Time Elapsed:** 120 seconds **Test:** 2 minute idle, PSM activated using `AT+CPSMS=1`, measured between active cycles

© NimbeLink Corp. 2022. All rights reserved.

Mode	RSRP	RSRQ	Peak Current	Avg. Current	Total Charge	Notes
eDRX	-100 dBm	-8 dB	72.5 mA	1.79 mA	89.3 µAh	**Time Elapsed:** 180 seconds **Test:** 1s Paging Window, 10.24 s Cycle Length, eDRX activated using `AT+CEDRXS=2,4,0001","0001"`, modem registered, `+CFUN: 5` mode, DTR tied to VREF (i.e UART disabled), status LED disabled.
	-100 dBm	-8 dB	52.4 mA	2.47 mA	124 µAh	**Time Elapsed:** 180 seconds **Test:** 4s Paging Window, 10.24 s Cycle Length, eDRX activated using `AT+CEDRXS=2,4,"0001","0100"`, modem registered, `+CFUN: 5` mode, DTR tied to VREF (i.e UART disabled), status LED disabled.
	-100 dBm	-8 dB	52.0 mA	3.70 mA	185 µAh	**Time Elapsed:** 180 seconds **Test:** 7s Paging Window, 10.24 s Cycle Length, eDRX activated using `AT+CEDRXS=2,4,"0001","0111"`, modem registered, `+CFUN: 5` mode, DTR tied to VREF (i.e UART disabled), status LED disabled.
	-100 dBm	-8 dB	58.4 mA	1.06 mA	51.1 µAh	**Time Elapsed:** 180 seconds **Test:** 1s Paging Window, 81.92 s Cycle Length, eDRX activated using `AT+CEDRXS=2,4,"0100","0001"`, modem registered, `+CFUN: 5` mode, DTR tied to VREF (i.e UART disabled), status LED disabled.
	-100 dBm	-8 dB	72.3 mA	1.10 mA	55.1 µAh	**Time Elapsed:** 180 seconds **Test:** 4s Paging Window, 81.92 s Cycle Length, eDRX activated using `AT+CEDRXS=2,4,"0100","0100"`, modem registered, `+CFUN: 5` mode, DTR tied to VREF (i.e UART disabled), status LED disabled.
	-100 dBm	-8 dB	70.5 mA	1.28 mA	70.4 µAh	**Time Elapsed:** 180 seconds **Test:** 7s Paging Window, 81.92 s Cycle Length, eDRX activated using `AT+CEDRXS=2,4,"0100","0111"`, modem registered, `+CFUN: 5` mode, DTR tied to VREF (i.e UART disabled), status LED disabled.
Idle, Not Registered on Network	-100 dBm	-8 dB	8.60 mA	7.18 mA	239 µAh	**Time Elapsed:** 120 s **Test:** 2 minute idle with `AT+CFUN=4`, and modem not attached to LTE network, status LED disabled
Powered Off	-	-	29.8 µA	3.16 µA	105 nAh	**Time Elapsed:** 120 s **Test:** Modem powered off with `AT#SHDN`, UART and USB disconnected

© NimbeLink Corp. 2022. All rights reserved.

2.3 RF Specifications

2.3.1 Maximum RF Output Power

Technology	Max Output Power
4G LTE M1, NB2 (3GPP Rel. 14)	23 dBm (Class 3)
2G GSM/GPRS	33 dBm (Class 4)

2.3.2 Typical RX Sensitivity

Band	LTE M1 (dBm)	LTE NB2 (dBm)
B1	-106.3	-115.4
B2	-107.3	-116.2
B3	-106.6	-116.4
B4	-106.7	-115.6
B5	-107.1	-116.5
B8	-107.3	-115.9
B12	-106.5	-116.6
B13	-107.9	-116.8
B18	-107.6	-116.6
B19	-106.8	-116.4
B20	-107.4	-116.0
B25	-107.0	-116.2
B26	-107.0	-116.1
B27	-107.4	-
B28	-107.8	-116.8
B66	-106.7	-115.6
B71	-	-113.7
B85	-105.3	-116.0

© NimbeLink Corp. 2022. All rights reserved.

2.3.3 Uplink and Downlink Speeds

Mode	2G EGPRS	4G LTE-M	4G NB2
Uplink	210 Kbps	1 Mbps	160 Kbps
Downlink	264 Kbps	588 Kbps	120 Kbps

2.4 Mechanical Characteristics

2.4.1 Mechanical Specifications

Parameter	Typical	Unit
Dimensions (excluding pin height, for solder to board applications)	29.0 x 33.60 x 6.63	mm
Dimensions (including pin height, for board to board connector applications)	29.0 x 33.60 x 10.73	mm
Weight	8	Grams
Connector Insertion/Removal	hundreds	Cycles

© NimbeLink Corp. 2022. All rights reserved.

2.4.2 Mating Connectors

Designator	Manufacturer	Populated on Modem	Recommended Mate	Manufacturer
J1, J2	3M	951110-2530-AR-PR	950510-6102-AR	3M
J3	Molex	786463001	Micro SIM 3FF Size	Micro SIM Card
X1, X3	Hirose	U.FL-R-SMT(10)	CAB.011	Taoglas

2.4.3 Mechanical Drawing

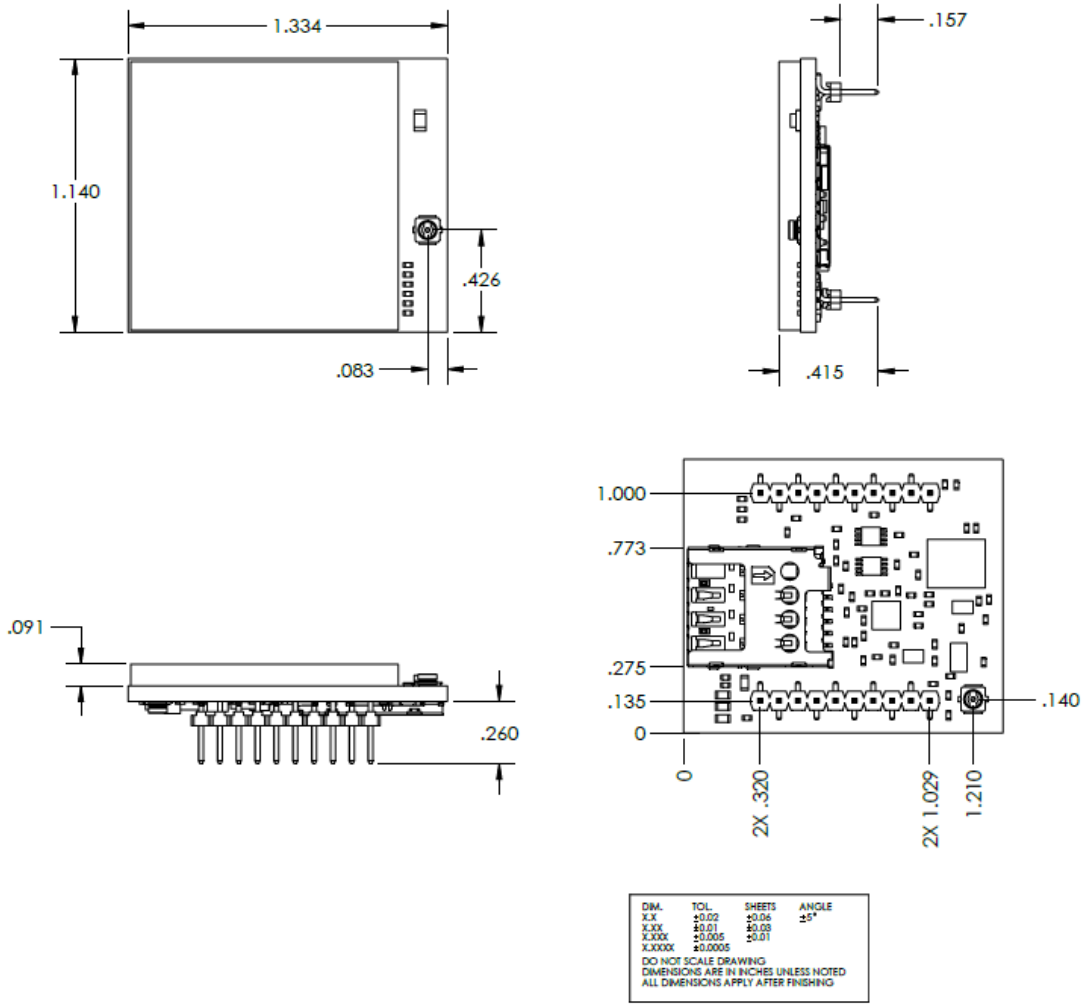

 © NimbeLink Corp. 2022. All rights reserved.

2.4.4 Device Placement

⚠ **Make sure the Skywire is installed in the baseboard with the correct orientation. Improperly orienting the Skywire will damage the device and void the warranty.**

2.5 Environmental Specifications

Parameter	Min	Typical	Max	Unit
Operating Temperature	-40	25	+85	˚C
Storage Temperature	-40	25	+105	˚C
Operating Humidity (Non-Condensing)	20		90	%

© NimbeLink Corp. 2022. All rights reserved.

3. Design Considerations

The following sections detail various design considerations that system designers should follow when designing a Skywire modem into their system. NimbeLink offers free schematic and layout design reviews for customers integrating a Skywire modem into their design. For more details please reach out to Nimbelink product support team at: product.support@nimbelink.com

To aid with customer design efforts NimbeLink has released a Skywire Hardware Developers Guide and a Design Checklist. These supplemental documents contain design guidelines and suggestions for customers designing Skywire modems into their hardware platforms. NimbeLink strongly suggests reviewing your hardware platform against these documents to ensure proper modem integration.

- Skywire Hardware Developers Guide
- Skywire Hardware Design Checklist

3.1 Power Supply Design

Section 3.1 contains information regarding proper power supply design for users who are designing their own baseboard for a Skywire modem. In order to ensure proper modem operation and prevent potential damage, it is crucial to follow each of the requirements listed in this section.

3.1.1 Power Supply Requirements

The NL-SW-LTE-TG1WWG modem will regularly consume high amounts of current on its main power supply (Pin 1, VCC) input, during transmits and receives. In order to maintain compatibility with the Skywire, the baseboard power supply should be designed to support peak currents of at least 2 Amps. A 0.1 uF and 100uF low ESR ceramic capacitor should be placed near the VCC pin on the module to ensure ample energy is available, with a low inductance path to the VCC pin.

Parameter	Symbol	Min	Typ.	Max	Unit
Operating Voltage Range	VCC	3.4	3.8	4.2	V
Current Consumption (Active Cellular Data Connection)	I_{VCC}	-	400	2000	mA

Note: *The Skywire can operate at a supply voltage less than 3.4V when USB, GNSS and 2G connectivity is disabled. Please contact NimbeLink Sales team for more information: sales@nimbelink.com*

 © NimbeLink Corp. 2022. All rights reserved.

3.1.2 Power Supply Design Guidelines

When designing the power supply for the Skywire modem it is recommended to follow the design guidelines listed below:

- For most applications a switching power supply is recommended to supply the power to the Skywire modem. A switching power supply will be able to rapidly respond to the sudden current demands of an LTE modem. To ensure compatibility with other Skywire modems it is recommended to use a switching regulator capable of supporting up to 2A. Example designs using a switching DC/DC regulator can be found in the reference schematics below.
- To reduce EMI from a switching regulator it is important to follow the design guidelines for the chosen switching regulator.
- Bypass ceramic capacitors (low ESR) with adequate capacity must be placed near the input to pin 1 (VCC) of the Skywire modem. It is recommended that the capacitor have a rated voltage of at least 2x the input voltage to the Skywire. A minimum of a 100 µF & 0.1µF capacitor is recommended for the Skywire modems. The 0.1uF capacitor should be placed as close as possible to pin 1 of the Skywire modem, followed by the 100 µF capacitor.
- The PCB traces from the power regulator and the bypass capacitors must be wide enough to ensure that there is a low impedance power delivery circuit available to the modem to ensure that no significant voltage drops occur. Try to keep the trace as short as possible.
- A dedicated ground plane is recommended.
- Power supply input cables should be kept away from noise sensitive lines, such as antennas.

There are multiple power supply reference designs available from NimbeLink, available to assist our customers with their power supply designs. Two of the designs are linked to below:

NL-SWDK2 Reference Schematic

NL-SWDK Reference Schematic

NL-AB-BBCL Reference Schematic

While prototyping with the modem, we recommend a development kit, not a breadboard. Please refer to the following application note on why breadboards might cause problems and how to fix them.

Prototyping with Cellular Modems and Modules

 © NimbeLink Corp. 2022. All rights reserved.

3.2 Serial Communications

NL-SW-LTE-TG1WWG modems have two communication paths: serial (UART) and USB. The serial UART interface is targeted for applications using lower speed 8/16/32 bit microcontrollers that do not have a USB interface or easily available USB interface drivers. The USB interface for the modem is meant for use by higher end systems with a native USB interface controller or operating system (Single board computers, Linux/Windows).

For designs that are only using the serial UART interface, NimbeLink recommends that users include test points or a non-populated USB connector footprint to allow access to the modem's USB interface to enable easy debugging and firmware updates.

3.2.1 Serial UART Interface

All Skywire modems support a serial UART interface with transmit and receive on pins 2 (DOUT) and 3 (DIN), respectively.

On NL-SW-LTE-TG1WWG modems, the baud rate defaults to 115200 Baud 8N1. If a different baud rate is required, it can be changed with the "**AT+IPR**" command, as defined in the AT command manual. The syntax of the "**AT+IPR**" command is as follows:

AT+IPR=<rate>

Where "**<rate>**" is any supported baud rate listed in the AT command manual.

The modem also supports hardware flow control (RTS/CTS) on pins 12 (CTS) and 16 (RTS). By default, the modem does not have flow control enabled.

To modify the flow control setting, see the "**AT&K**" command from the AT command manual. The syntax of the "**AT&K**" command is as follows:

AT&K<x>

Where "**<x>**" is replaced with either "**0**" to disable flow control, or "**3**" to enable flow control.

To verify the current settings of **"AT&K"**, check the settings of the active profile by issuing the following command:

AT&V

It is recommended that any designs using the serial UART interface connect the RTS/CTS flow control lines to the host microcontroller and enable them in their application to prevent the MCU or modem from overrunning each other when either can't keep up.

 © NimbeLink Corp. 2022. All rights reserved.

3.2.2 USB Interface

The NL-SW-LTE-TG1WWG supports a USB 2.0 interface on pins 6 (VUSB), 7 (USB_P), and 8 (USB_N). Systems connecting to the modem's USB interface must observe proper design practices for connecting to a high speed USB device including, but not limited to, the following:

- The USB D+/- traces should be routed as 90 ohm impedance differential pair.
- The USB D+/- traces should be length matched.
- USB trace lengths should be minimized.
- USB differential pairs should be carefully routed to ensure they have a continuous return path beneath the traces. Do not route differential pairs over splits in ground or power planes.
- If the USB signals will be used off-board ESD protection should be implemented near the off-board connector.

Pin 6 (VUSB) is the detection pin that the modem uses to detect if a USB host controller has been connected to the modem. This pin has an internal 100K pulldown and must have a voltage between 3.0V and 5.5V applied to it in order to activate the USB interface. The VUSB pin will draw less than 1mA when connected.

3.3 VREF

The VREF signal (pin J2-4) drives the input voltage side of an onboard buffer which converts external I/O voltage from VREF range to 1.8V range to drive the onboard Telit ME910G1-WW module. System designers should connect the reference voltage of their system to this pin. The VREF pin will draw less than 1mA when the modem is powered.

If the baseboard powers down the modem at any time, it should also concurrently remove the reference voltage from the VREF pin.

3.4 nRESET

In the event that the modem becomes unresponsive, pin 5 (nRESET), can be used to unconditionally shut down the modem. This will cease any current modem operation, and reset the modem without detaching it from the network. The modem will need the ON_OFF signal applied again to power on after a nRESET condition.

Users can monitor the ON/nSLEEP pin to determine if the modem has powered down.

In most cases, network providers request that a device gracefully detach from the network before shutting down. Repeated use of the nRESET pin violates this request. As such, the nRESET pin should only be used as a last resort when the modem is not responding to AT commands.

Repeated failure to gracefully detach from the network during shutdown may result in the device being blacklisted from the network for a period of time, or indefinitely.

 © NimbeLink Corp. 2022. All rights reserved.

The nRESET signal is an active low signal. The signal is internally pulled up to VCC. Do not apply a voltage to this pin other than connecting it to ground.

To unconditionally shut down the modem with the nRESET signal, tie the pin low for at least 200 milliseconds and then release. The signal is internally pulled up to the modem's internal 1.8V rail. If the pin is not used, it can be left floating, but it is highly recommended that the signal be connected to the host system. If the pin is used, it should be driven with an open collector output from the host system or a discrete open collector transistor.

In high noise (high EMI) environments, it is recommended that customers place a 0.01-0.1 uF capacitor on the nRESET line near the J1 connector.

3.5 Power Control

3.5.1 ON_OFF Signal

The ON_OFF signal on pin 20 is used to turn the modem on, turn the modem off, and wake the modem from deep sleep.

To conserve power, the onboard cellular module does not automatically startup when power is applied. Therefore, the baseboard design must supply a means to assert the ON_OFF signal low for at least 5 seconds, and then release. The ON_OFF signal should be driven with an open collector output or with an open collector transistor. The signal is internally pulled up and should not be driven high, as doing so may prevent the modem from booting.

For optimal control of the cellular modem, it is recommended that the system designer control the ON_OFF signal from their host platform using an open collector output or external discrete open collector transistor.

 © NimbeLink Corp. 2022. All rights reserved.

3.5.2 Shutdown

The modem should be shut down in a controlled manner, gracefully disconnecting from the network. Failure to perform a proper shutdown violates carrier requirements. In rare events, failure to properly shut down the modem could render the modem inoperable due to firmware corruption.

To gracefully shut down the modem, the host system should do the following:

- Shut down the modem with the **AT#SHDN** command. This command will gracefully disconnect the modem from the network and shut down the modem. This takes around 1 second. After this command is issued the host system should cease any communications with the modem.
- Ensure that the host system is not back powering the modem through any of the modem's I/O lines.
- Remove VREF (if VCC is being removed).
- Remove VCC.

In the event of power failure, the modem may need to be shut down faster than the **AT#SHDN** command can manage. To quickly power down the modem in the event of power failure the **AT#FASTSHDN** command can be used. The modem's GPIO pins can also be configured to perform a fast shutdown. See the modem's AT command manual for more details on configuring fast shutdown with the **AT#GPIO** command.

3.6 ON/nSLEEP

The ON/nSLEEP signal on pin 13 drives the on-board LED which indicates the current network status. By default, the NL-SW-LTE-TG1WWG module has this setting disabled. Use the following commands to enable and save this feature.

First, configure the GPIO for alternate function:

AT#GPIO=1,0,2

The modem should respond with:

OK

Network Status Indication	LED Status
Device Off	Permanently off
Not Registered	Permanently on
Registered in idle	Blinking: 1 second on + 2 second off
Registered in idle + PSM	Depends on network condition to minimize power consumption
Connecting	Blinking: 1 second on + 2 second off

 © NimbeLink Corp. 2022. All rights reserved.

3.7 Firmware Updates Over the Air (FOTA)

LTE networks are constantly being updated, improved, and enhanced with new features. As a result, carriers tend to make frequent network changes. Most will not negatively affect devices connected to those networks, but occasionally an update will prevent an unprepared device from reconnecting to the network permanently.

To account for these future changes, FOTA (Firmware over the Air) capability is being added to all cellular modules by each module manufacturer. NimbeLink supports this functionality in the Skywire family of embedded modems.

As a developer using the Skywire modem, it is required to implement support for FOTA into a device's firmware. Failure to do so may result in the interruption of cellular connectivity in the event of a network change. A loss in network connectivity also means that the device loses its ability to update using FOTA. Thus, the only way to restore connectivity to the device would be to physically retrieve it, and manually update the firmware.

FOTA Instructions are available by contacting NimbeLink's product support team at product.support@nimbelink.com.

3.8 Soldered-Down SIM

The NL-SW-LTE-TG1WWG modem has the ability to select between a soldered-down SIM or a removable SIM inserted into the SIM card slot on the modem. By default the modem is configured to attempt to use the SIM card slot. However, users can select which SIM the modem is using by controlling the SIM selection switch with GPIO10. Whenever the SIM selection is switched the modem's RF system will need to be toggled with the **AT+CFUN** command.

To configure the modem to use the soldered down SIM, and save this as the modem's default configuration, issue the following commands to the modem in the order they appear below:

AT+CFUN=4

AT#GPIO=10,1,1,1

AT+CFUN=1

To configure the modem to use the SIM in the SIM card socket, and save this as the modem's default configuration, issue the following commands to the modem in the order they appear below:

AT+CFUN=4

AT#GPIO=10,0,1,1

AT+CFUN=1

 © NimbeLink Corp. 2022. All rights reserved.

3.9 Multi-Image Firmware Information

3.9.1 Overview

The NL-SW-LTE-TG1WWG has a multi-image firmware that allows the user to switch between Verizon, AT&T and global firmware versions using an AT command.

The "**AT#FWSWITCH**" command is used to select the active firmware image for the modem. The firmware profile selection is saved in memory, and will persist across reboots and power cycles.

This command also has the option to return the modem to default settings for the specific firmware configuration, or to restore the user settings after the firmware swap.

Note: *"User Settings" consist of APN values, PDP configurations, etc. Choosing not to reload the user settings (i.e. AT#FWSWITCH=x,1,**0**"), will result in these settings being cleared when the modem boots up with the new firmware profile.*

3.9.2 AT#FWSWITCH Command Syntax

AT#FWSWITCH=<imageNumber>[,<storageConf>[,<restoreUserSettings>]]

Argument	Default	Description
<imageNumber>	0	Identifies the FW image to load: 0 = AT&T 1 = Verizon 2 = Global 3 = AU ***Note:*** *NimbeLink sets this parameter to "0" during production. However, the FW default setting for this parameter is "2". Updating the FW will cause this value to revert back to the Telit default value of "2".*
<storageConf>	1	Selects the storage config. Must be set to 1.
<restoreUserSettings>	0	Determines if user settings will be restored after the firmware swap: 0 - Restore settings to default after FW swap 1 - Restore user settings after FW swap

Note: *Use of the Global and AU firmware images may require additional certification for the customer's end-device, depending on unique carrier requirements.*

 © NimbeLink Corp. 2022. All rights reserved.

3.9.3 Selecting the AT&T Firmware Configuration

To activate the AT&T configuration, send the following sequence of commands:

AT Command / Action	Description
AT#FWSWITCH=0,1,0 **OR** AT#FWSWITCH=0,1,1	Select the AT&T firmware configuration The third argument determines if user settings are restored: 0 - Restore default settings 1 - Restore user settings
Wait for modem to reboot	The Skywire will reboot automatically after sending the AT#FWSWITCH command
AT#IOTBND=252582047,1048578,2058,0	Select AT&T cellular bands, per Telit ME910G1-WW AT command manual
AT#REBOOT	Reboot the modem to apply the new cellular bands configuration

3.9.4 Selecting the Verizon Firmware Configuration

To activate the Verizon configuration, send the following sequence of commands:

AT Command / Action	Description
AT#FWSWITCH=1,1,0 **OR** AT#FWSWITCH=1,1,1	Select the Verizon firmware configuration
Wait for modem to reboot	The Skywire will reboot automatically after sending the AT#FWSWITCH command
AT#WS46=0	Selects the IoT technology to operate with, per Telit AT command manual: 0 - CAT-M1 1 - NB-IoT 2 - CAT-M1 (preferred) and NB-IoT 3 - CAT-M1 and NB-IoT (preferred)
AT#REBOOT	Reboot the modem to apply the new IoT technology configuration

 © NimbeLink Corp. 2022. All rights reserved.

3.10 GNSS

NL-SW-LTE-TG1WWG modems have a built-in GNSS receiver that is capable of receiving the entire spectrum of GNSS systems available, including: GPS, GLONASS, BeiDou, Galileo, and QZSS.

The Telit ME910G1-WW cellular module on the TG1WWG Skywire modem does not contain an internal LNA, which is required to reach the maximum sensitivity for the GNSS receiver. Therefore, an active GNSS antenna must be used.

NOTE:

Due to hardware limitations of the cellular chipset, the TG1WWG cannot use GNSS and cellular concurrently.

The modem should be placed into AT+CFUN=4 mode before attempting to use the GNSS receiver. Please refer to the GNSS application note for more details.

3.10.1 GNSS Antenna Requirements

Item	Value
Antenna Type	Active
Frequency Range	1559.0 - 1610.0 MHz
Gain	15dB ~ 30dB
Impedance	50 Ohm
Noise Figure of LNA	<1.5 (Recommended)
DC Supply Voltage	3.3 VDC
VSWR	<3:1 (Recommended)

© NimbeLink Corp. 2022. All rights reserved.

3.10.2 GNSS Receiver and LDO Control

A 3.3VDC, 150 mA LDO is used on the modem to bias the GNSS antenna port. The LDO is enabled with an internal GPIO pin, and is disabled by default to save power.

To turn on the GNSS receiver and enable the LDO send the following command:

AT$GPSP=1

To turn off the GNSS receiver and disable the LDO send the following command:

AT$GPSP=0

By default, the GNSS receiver is powered off, and the state of the **AT$GPSP** command is not saved across reboots. To configure the GNSS receiver to start at power on, and have this setting persist across power cycles, send the following commands:

AT$GPSP=1

AT$GPSSAV

Please refer to the GNSS application note for more information and instructions on how to use the GNSS receiver and collect location data.

3.10.3 GNSS Antenna Placement

- The antenna must be installed according to the antenna manufacturer's instructions to obtain the maximum performance of the GNSS receiver.
- The antenna location must be evaluated carefully if operating in conjunction with any other antenna or transmitter.
- The antenna must not be installed inside metal cases or near any obstacle that may degrade features like antenna lobes and gain.
- Keep the antenna and the antenna cabling away from any power supply lines, noisy EM devices, and wireless RF lines.

 © NimbeLink Corp. 2022. All rights reserved.

3.11 Cellular Antenna Requirements

NL-SW-LTE-TG1WWG modems support one primary cellular antenna connection for its RX & TX communication via the X1 connector on the top of the modem. The X1 connector is a U.FL connector. Many antennas will require the use of a U.FL to SMA cable, such as the Taoglas CAB.011.

3.11.1 Primary Antenna Requirements

Required Primary Antenna Specifications	
Frequency Range	Depending on the frequency bands provided by the network operator, the customer shall use the most suitable antenna for those bands
Bandwidth	**Band 1:** 250 MHz in LTE **Band 2:** 140 MHz in LTE, PCS1900 **Band 3:** 170 MHz in LTE, DCS1800 **Band 4:** 445 MHz in LTE **Band 5:** 70 MHz in LTE, GSM850 **Band 8:** 80 MHz in LTE, GSM900 **Band 12:** 47 MHz in LTE **Band 13:** 41 MHz in LTE **Band 18:** 60 MHz in LTE **Band 19:** 60 MHz in LTE **Band 20:** 71 MHz in LTE **Band 25:** 145 MHz in LTE **Band 26:** 80 MHz in LTE **Band 27:** 62 MHz in LTE **Band 28:** 100 MHz in LTE **Band 66:** 490 MHz in LTE **Band 71:** 81 MHz in LTE **Band 85:** 48 MHz in LTE
Impedance	50 ohm
Input Power	>33 dBm Average Power
VSWR Max	≤10:1
VSWR Recommended	≤2:1

Any antennas used with the modem will need to comply with the Wireless Notice detailed in Section 5.8.

 © NimbeLink Corp. 2022. All rights reserved.

3.11.2 Antenna Placement

Cellular antenna placement will directly affect the modem's performance. It is vital that system designers carefully consider the placement of the antenna and follow all of the guidelines & specifications set by the antenna manufacturer. The following guidelines are general recommendations for antenna installation:

- Make sure the impedance of the antenna is 50 ohms.
- Keep the antenna cable as short as possible.
- The antenna must not be installed inside a metal case.
- The antenna must be installed according to the manufacturer's instructions.
- Antenna gain must not exceed the values indicated in regulatory requirements.
- Antenna integration should optimize antenna efficiency. Antennas are recommended to have >50% efficiency on all frequency bands.
- Additional FCC/IC testing may be required for applications where the antenna is located closer than 20 CM from the body.
- If the device antenna is located farther than 20 centimeters from the human body and there are no co-located transmitters then the Telit FCC/IC approvals can be re-used by the end product.
- Antenna should not be mounted near noisy EM devices.

3.11.3 Recommended Antennas

While Skywire modems will work with antennas from other manufacturers, the following antennas have been designed specifically to work with Skywire.

Type	Manufacturer	Part Number
Internal Cellular Antenna	Taoglas	FXUB65.07.0180C
External Cellular Antenna [1]	Taoglas	TG.30.8113

Note 1: U.FL to SMA adapter required.

© NimbeLink Corp. 2022. All rights reserved.

3.12 Skywire Reference Design

NimbeLink offers freely available reference schematic and layout files as examples of how to integrate the Skywire modem into various systems. Schematics, design files, gerbers, and tutorials for a variety of different systems can be found on the Skywire Development Tools webpage:

https://nimbelink.com/skywire-development-tools/

4. Mounting Guidelines

The Skywire embedded cellular modem supports multiple connection methods. However, the two primary methods are board-to-board connectors and soldering directly to the baseboard.

4.1 Board-to-Board Connectors Approach

The Skywire interface calls for two, 10-pin, 2mm pitch female receptacles spaced 22 mm apart.There are many connector manufacturers that can be used; below is one readily available product:

Manufacturer: Sullins Connector Solutions

Part Number: NPPN101BFCN-RC

Typical part drawing and footprint information for the NPPN101BFCN-RC connector:

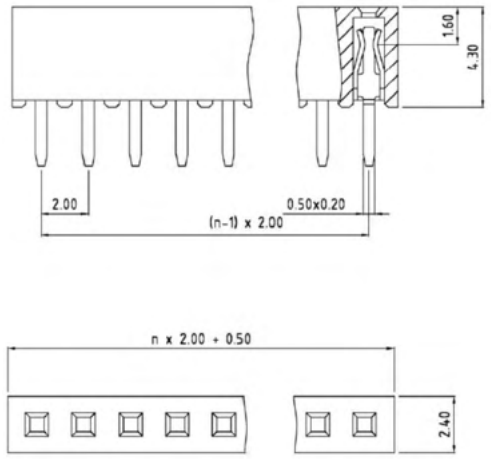

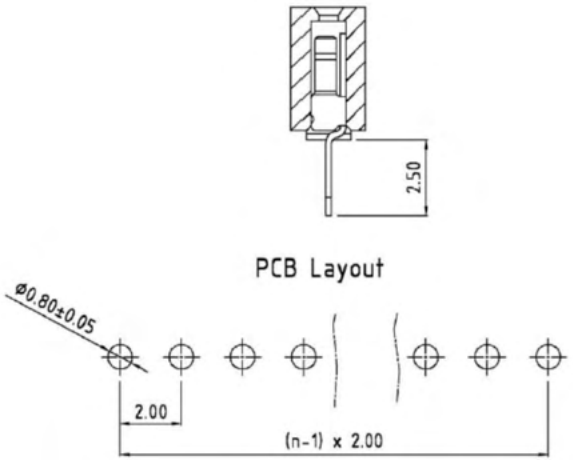

 © NimbeLink Corp. 2022. All rights reserved.

4.1.1 Mechanical Retention

Certain applications where the modem is mounted on the host board using the connector approach detailed in Section 4.1 may need to mechanically secure the Skywire modem & its SIM card in order to prevent the modem from vibrating out of the PCB. The Skywire modem does not have any dedicated attachment points for securing it to the host board, however it can easily be secured by one of the following methods:

- Zip ties
- Foam tape mounted on the Skywire to press against the housing
- Mechanical retention of the modem & SIM by the enclosure (example)
- Solder the Skywire to the host board (as described in section 4.2)

4.2 Solder-to-Board Connection

The Skywire modem can be soldered directly to a PCB. The PCB should be designed with two rows of ten, 0.8mm plated through holes spaced 2mm apart. The two rows should be 22mm apart. See below for the recommended footprint. Measurements are in millimeters. U.FL locations are marked with circles, X1 is on the top of the board, X3 is on the bottom of the board. If the application is using GPS connector X3, the RF cable should be attached to the modem BEFORE the modem is soldered into the baseboard or else it may be difficult or impossible to attach the RF cable.

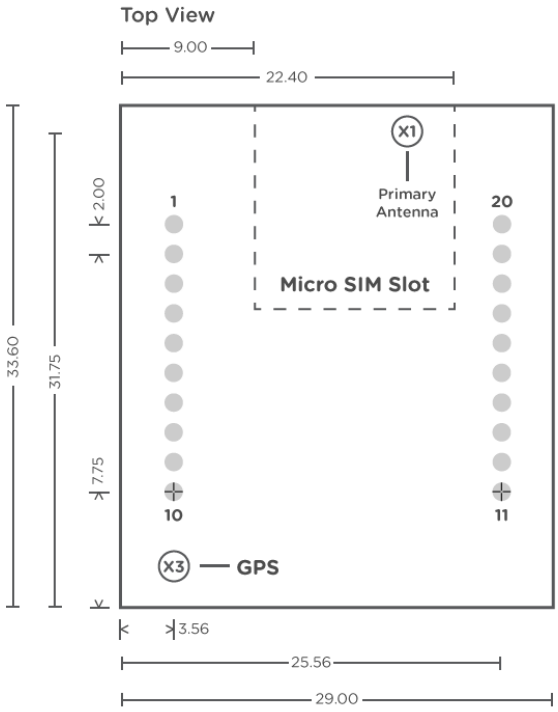

 © NimbeLink Corp. 2022. All rights reserved.

5. Regulatory information

5.1 FCC & IC Compliance

If the modem's antenna is located farther than 20 cm from the human body and there are no co-located transmitter then the modems underlying Telit module FCC/IC approvals can be re-used by the end product.

Should the modem's antenna be mounted closer than 20 cm from the human body or if there are co-located transmitters then additional FCC/IC testing may be required for the end product.

The NL-SW-LTE-TG1WWG modems make use of the underlying Telit ME910G1-WW module FCC & IC identification numbers.

Orderable Device	FCC ID	IC ID
NL-SW-LTE-TG1WWG	RI7ME910G1WW	5131A-ME910G1WW

The FCC Certificate is available at the link below, by searching for the FCC ID listed above:

https://www.fcc.gov/oet/ea/fccid

The IC/ISED Certificate is available at the link below by searching for the IC ID listed above:

https://sms-sgs.ic.gc.ca/equipmentSearch/searchRadioEquipments?execution=e1s1&lang=en

5.2 Regulatory Certifications

- **FCC ID:** RI7ME910G1WW
- **IC:** 5131A-ME910G1WW
- **PTCRB:** Complete

5.3 Carrier Specific Certifications

- **AT&T:** Complete
- **Verizon:** Complete

© NimbeLink Corp. 2022. All rights reserved.

5.4 Export Control Classification Number (ECCN)

ECCNs are five character alpha-numeric designations used on the Commerce Control List (CCL) to identify dual-use items for export control purposes. An ECCN categorizes items based on the nature of the product, i.e. type of commodity, software, or technology and its respective technical parameters.

ECCN for All Skywire Modems: 5A992.c

5.5 Harmonized Tariff Schedule Code

HTS Code: 8517.62.0010

5.6 RoHS Compliance

The NL-SW-LTE-TG1WWG modem family complies with the RoHS (Restriction of Hazardous Substances) directive of the European Union, EU Directive 2011/65/EU.

5.7 Interference Statement

This device complies with Part 15 of the FCC Rules and Industry Canada licence-exempt RSS standards. Operation is subject to the following two conditions: (1) This device may not cause harmful interferences, and (2) this device must accept any interference received, including interference that may cause undesired operation.

 © NimbeLink Corp. 2022. All rights reserved.

5.8 Wireless Notice

In order to maintain FCC/ISED radiation exposure limits set forth for an uncontrolled environment alongside carrier specific certifications the antennas cannot exceed the maximum gain levels listed here:

Frequency Band	Max Gain (dBi)
Band 2	8.01
Band 4	5.00
Band 5	9.41
Band 8	8.9
Band 12	8.70
Band 13	9.16
Band 25	8.01
Band 26	9.36
Band 66	5.00
Band 71	11.47
Band 85	8.69

© NimbeLink Corp. 2022. All rights reserved.

5.9 Modification Statement

Nimbelink has not approved any changes or modifications to this device by the user. Any changes or modifications could void the user's authority to operate the equipment.

5.10 End Product Labeling Requirements

End products utilizing the NL-SW-LTE-TG1WWG modems should be labeled with the information:

Device Uses Approved Radio: NL-SW-LTE-TG1WWG Contains FCC ID: RI7ME910G1WW Contains IC: 5131A-ME910G1WW This device complies with Part 15 of the FCC Rules and Industry Canada licence-exempt RSS standards. Operation is subject to the following two conditions: (1) This device may not cause harmful interferences, and (2) this device must accept any interference received, including interference that may cause undesired operation.

 © NimbeLink Corp. 2022. All rights reserved.

6. Document Version Information

Revision	Description	Date	Reviewer
1	Initial release	07/19/21	SR, JR
2	Changed antenna listings	08/02/21	KR
3	Updated 3FF SIM selection command	08/19/21	SR
4	Added Power Consumption Tables Added default FW image note to AT#FWSWITCH table (factory default is 0) Added a note to the GNSS section to document that cellular and GNSS cannot be used concurrently. Updated the certification sections to change PTCRB, AT&T, and Verizon to "Complete"	01/20/2022	SR

© NimbeLink Corp. 2022. All rights reserved.