Description



- Innovative metal housing
- For safe connections in the smallest possible space
- EMC protection
- Crorrosion-resistant

General characteristics

Series	ULTRA H-A 3
Version	Hood
Locking mechanism	Bolts for single lever
Cable gland	Integrated
Clamping range	5 – 9 mm
Protection rating (DIN EN 60529)	IP 66 (latched) IP 68 - 1 meter / 10 hours (latched)
Protection rating (NEMA 250, UL50E)	4, 4X, 12 (latched)
Temperature range	-40 °C to +100 °C, short-term up to +125 °C
Holding screws for inserts included	yes

Materials and surfaces

Housing, base material	Zinc die-casting
Housing, surface	Nickel-plated
Cap nut	Brass, nickel-plated
Insert with lamellar cage	Polyamide
Sealing ring	CR
Holding screws for inserts	Stainless steel

Standard

Safety Standard	IEC 61984

Approvals

cURus and VDE in preparation.

We reserve all rights according to DIN ISO 16016.

Technical Drawings

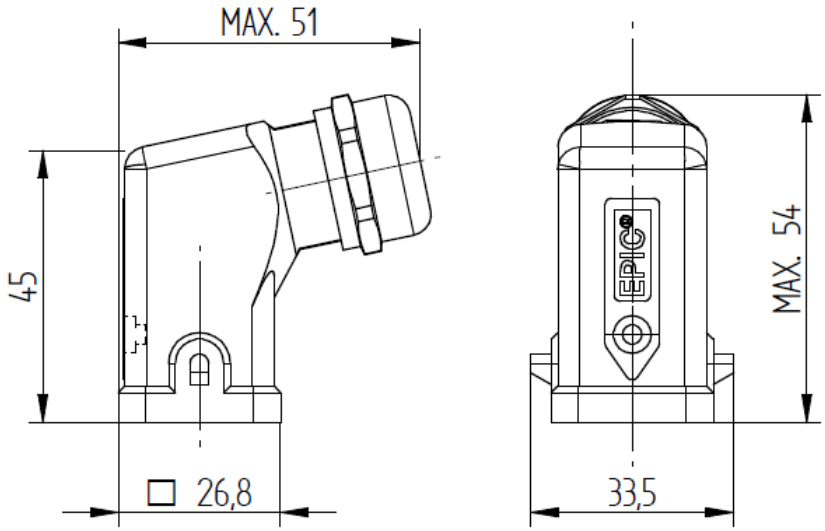

Waterproof

Space requirement

Interference signals

Assembly time

Connectors with standart housing

Corrosion resistant

Robust

Good chemical resistance

Info

EMC protection, Corrosion-resistant, Compact, robust metal housings size H-A 3

Application range

In EMC-sensitive environments, For fixed and flexible applications (e.g. machinery building, wind turbines), Construction machinery, Electric motor manufacturing

Remark

Photographs are not to scale and do not represent detailed images of the respective products.

We reserve all rights according to DIN ISO 16016.