N-Tron® NT7008-FX2
8-port Advanced Managed Gigabit Industrial Ethernet Switch

NT7000 Series managed gigabit Ethernet switches are designed for fast performance, high-speed motion control, and maximum uptime. Easy to use, highly reliable, and certified to withstand the toughest environments. The NT7008-FX2 has 6 10/100/1000BaseT RJ45 ports and 2 100BaseFX SC/ST style connector ports.

Motion-ready, rugged managed Ethernet switches for easy OT/IT convergence

Features & benefits

- **Fast Gigabit performance**

  All-Gigabit copper portfolio with fixed port FX/LX fiber or dual mode SFP options available. Boost bandwidth for data collection, vision systems, and segmented networks with flexible, future-proof connectivity.

- **Precision timing**

  Hardware-based IEEE-1588 PTP for precise time synchronization. Motion-ready EtherNet/IP infrastructure supports coordinated motion, faster startup and recovery, and consistent timing across distributed automation systems.

- **Segmented architecture**

  Support complex ring topologies without sacrificing speed. N-Ring™ redundancy offers ~20 ms healing for ultra-fast fault recovery, reduced downtime, and seamless production in industrial networks.

- **Quick startup**

  The logical dashboard with quick start wizard ensures fast deployment. Text-based configuration files make it easy to retrieve and redistribute settings across your network for simple, rapid scaling.

- **Rapid recovery**

  Leverage fast boot and quick recovery protocols to prioritize uptime. Fast boot feature passes traffic in < 7 seconds. Recover quickly without long startup delays following power cycles or switch replacement.

- **Rugged design**

  Built for extremes with a -40 °C to 85 °C operating temperature, 10-49 VDC redundant power inputs, surge protection, and high shock/vibration tolerance in a compact, metal casing for reliable industrial performance.

- **Reliable configuration**

  An optional microSD card enables fast replacement and recovery by allowing configurations to be backed up and restored without reconfiguration—reducing downtime and risk of errors.

- **Network security**

  Future-ready network security and management features: password encryption, MAC security, SSH/SSL/HTTPS, SNMPv3, user/port lockout after failed authentication attempts, IEEE 802.1X with RADIUS user authentication.

- **Reliability and diagnostics**

  Get your network back online in minutes, not hours with reliable diagnostic features like port mirroring, event log/Syslog, LLDP, advanced cable diagnostics, configurable alarms and faults, and LED status indicators.

- **Automation ready**

  N-View™ 3 reduces setup time and troubleshooting with device and topology discovery, network health monitoring, and simplified remote firmware and device management. The switches also support CIP messaging with AOI and Faceplate integration for Rockwell environments.

- **Extensive industry certifications**

  Ideal for use in most industrial applications, including factory automation, motion control and robotics, food and beverage, oil and gas, alternative energy, water/wastewater, machine builders/OEM, marine, rail, industrial protocols, and more.

N-Tron® NT7008-FX2 8-port Advanced Managed Gigabit Industrial Ethernet Switch

General

Net Width (mm)	61.1
Net Height (mm)	117
Net Depth (mm)	129.8
Net Weight (g)	772.2
Packged Width (mm)	304.8
Packed Height (mm)	133.4
Packed Depth (mm)	254
Packed Weight (g)	1150.8
Operating Temperature °C Min	-40
Operating Temperature °C Max	85
Storage Temperature °C Min	-40
Storage Temperature °C Max	85
Relative Humidity	10% to 95% (Non Condensing)
Input Voltage (V)	10-49 VDC
Steady Input Range	0.26 A @ 24 VDC
BTU/hr	21.28
Reverse Polarity Protection	Yes
Fast Boot	Traffic passes < 7 seconds
Latency (typical)	< 1.8 µs
Maximum Throughput	Up to 12.4 Gb/s
VLAN Address Support	Up to 4k
MAC Address Support	Up to 4k
Maximum Installation Altitude (m)	3048
Mounting	DIN-rail mounting or direct panel mounting
Housing Materials	Metal Housing
Packaging Material	Cardboard
Warranty (years)	3

Identification and Status

Product ID	NT-7008-FX2-SC00, NT-7008-FX2-SC15, NT-7008-FX2-SC40, NT-7008-FX2-SC80, NT-7008-FX2-ST00, NT-7008-FX2-ST15, NT-7008-FX2-ST40, NT-7008-FX2-ST80
Country of Origin	United States of America
HS Code	8517620000
Export Control Classification Number (ECCN)	5A991.c

N-Tron® NT7008-FX2 8-port Advanced Managed Gigabit Industrial Ethernet Switch

Physical Features

Connectors / Input / Output	6x RJ45, 2 SC/ST
Top Wiring Clearance (mm)	101.6
Front Wiring Clearance (mm)	101.6
USB Port	USB-C
SD Card Slot	microSD

Data Features

Logging and Monitoring	Event logging via syslog
Alarms	Configurable alarm contact
Redundancy	N-Ring multi-member/manager, STP, RSTP, MSTP
Traffic Management	Auto-IGMP Snooping, QoS, Broadcast/multicast storm control, Per-port ingress/egress rate limiting
Network Management	SNMP V1/2/3

Switch Features

Total Ports	8
10/100/1000	6
100Base Fiber	2
Fiber Connector Type	SC or ST
Fiber Distance Rating	2km, 15km, 40km or 80km

Safety & Security

Safety Standards	UL 61010 & CSA C22.2 No. 61010-1; UL 121201 & CSA C22.2 No. 213; IECEx UL 25.0082X; UL 25 ATEX 3474X

N-Tron® NT7008-FX2 8-port Advanced Managed Gigabit Industrial Ethernet Switch

Certifications & Standards

Protection Class IP	IP30
RoHS Compliant	Yes
CE	Yes
FCC	Yes
UL	Yes
UL Information	E317425
ATEX	Yes
ATEX Information	UL 25 ATEX 3474X
IECEx	Yes
IECEx Information	IECEx UL 25.0082X
ABS	Yes
EMC	Yes
Mean Time Before Failure (MTBF)	1.5M Hours
Vibration and Shock	IEC 68-2-27: 200 g @ 10 ms Triaxial; non-operational; panel mounted; IEC 68-2-6: 15 g @ 5-200 Hz Triaxial; operational; panel mounted
Railway/Rolling Stock	EN 50155, EN 50121, EN 61373
Designed to Comply With	IEEE 1613 for Electric Utility Substations and NEMA TS1/TS2 for Traffic Control
Industrial Protocols	EtherNet/IP™ Conformant

N-Tron® NT7008-FX2 8-port Advanced Managed Gigabit Industrial Ethernet Switch

DIMENSIONS In inches [mm]

DIN rail

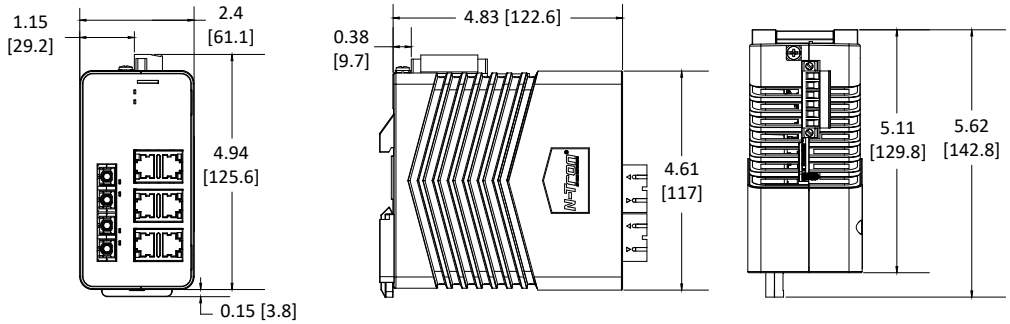

Optional panel mount

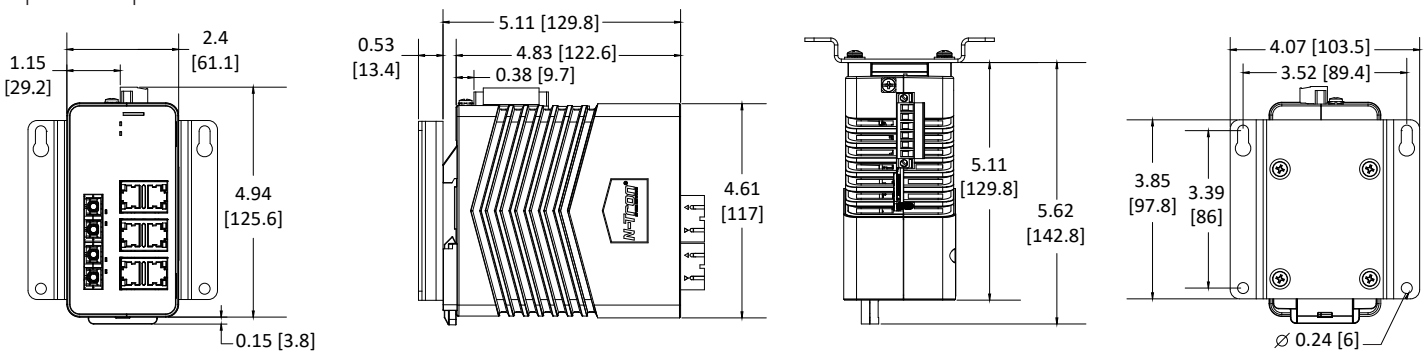

Transceiver Characters

100 MB Fiber Transceiver Characteristics

Fiber Mode	MM	SM	SM	SM
Fiber Length*	2 km	15 km	40 km	80 km
TX Power Min.	-19 dBm	-15 dBm	-5 dBm	-5 dBm
RX Sensitivity Max.	-31 dBm	-34 dBm	-34 dBm	-34 dBm
Wavelength	1310 nm	1310 nm	1310 nm	1550 nm

* Fiber Length distances represent typical performance. Link budgets should be evaluated based on specific application conditions.

N-Tron® NT7008-FX2 8-port Advanced Managed Gigabit Industrial Ethernet Switch

Ordering Guide

Main Unit

Part Number	Description
NT-7008-FX2-SC00	8-Port Gigabit Managed Industrial Ethernet Switch (6 10/100/1000BaseT RJ45 ports, 2 100BaseFX, multi-mode, 2km, SC Style Connector)
NT-7008-FX2-SC15	8-Port Gigabit Managed Industrial Ethernet Switch (6 10/100/1000BaseT RJ45 ports, 2 100BaseFX, single-mode, 15km, SC Style Connector)
NT-7008-FX2-SC40	8-Port Gigabit Managed Industrial Ethernet Switch (6 10/100/1000BaseT RJ45 ports, 2 100BaseFX, single-mode, 40km, SC Style Connector)
NT-7008-FX2-SC80	8-Port Gigabit Managed Industrial Ethernet Switch (6 10/100/1000BaseT RJ45 ports, 2 100BaseFX, single-mode, 80km, SC Style Connector)
NT-7008-FX2-ST00	8-Port Gigabit Managed Industrial Ethernet Switch (6 10/100/1000BaseT RJ45 ports, 2 100BaseFX, multi-mode, 2km, ST Style Connector)
NT-7008-FX2-ST15	8-Port Gigabit Managed Industrial Ethernet Switch (6 10/100/1000BaseT RJ45 ports, 2 100BaseFX, single-mode, 15km, ST Style Connector)
NT-7008-FX2-ST40	8-Port Gigabit Managed Industrial Ethernet Switch (6 10/100/1000BaseT RJ45 ports, 2 100BaseFX, single-mode, 40km, ST Style Connector)
NT-7008-FX2-ST80	8-Port Gigabit Managed Industrial Ethernet Switch (6 10/100/1000BaseT RJ45 ports, 2 100BaseFX, single-mode, 80km, ST Style Connector)

Model number may be followed by –CC indicating conformal coating.

Accessories

Part Number	Description
NTCD-NT7000	NT7000 CONFIG DEVICE MICROSD
NT-CPMA-03-00000	NT5000 PANEL MOUNT KIT. Type A (see switch datasheet for compatibility) Models: NT7008-FX2, NT7008-GX2, NT7010-FX2, NT7010-GX2, NT7012-DM4
NTPS-24-1-3	DIN Rail Power Supply, 1.3 Amp @ 24 VDC

© 2026 HMS Networks. All Rights Reserved. The terms N-Tron, the N-Tron logo, N-View and N-Ring are trademarks or registered trademarks of HMS Technology Center USA Inc. All other marks are the property of their respective owners. LD1342A 05 2026