M12 male 0° / M12 male 0° D-cod. shielded

TPE 2x2x24AWG SF/UTP CAT5e bu UL/CSA. CM 0.5m

Art.No.: 7700-44511-S4U0050
Weight: 0.057 kg
Country of origin: DE
Model designation: MSDAL0-DA-TS4U_0.5-ZS

Advantages of our connectors:

Our connectors are versatile and specially optimised for industrial environments. All connectors are 100% tested during the manufacturing process to ensure the highest quality and reliability.

The contacts are gold-plated, which ensures optimum conductivity. Thanks to the high degree of protection, the connectors are ideal for demanding industrial environments. They are also vibration-resistant - this is ensured by the union nut with vibration protection.

Our connectors are resistant to oils and cooling lubricants, but resistance to aggressive media should be tested for each specific application. Different cable lengths available on request

If you are missing technical information? Please feel free to use our dictionary to find more technical details.

Product details:

USA
Ethernet CAT5
Male straight – male straight
M12 – M12, 4-pole
D-coded
Shielded
without cable sleeves
maximum length at channel transmission corresponds to 70 m
Plastic housings with good resistance against chemicals and oils.
The resistance to aggressive media should be individually tested for your application. Further details on request.
Further cable lengths on request.

Link to Product

Illustration

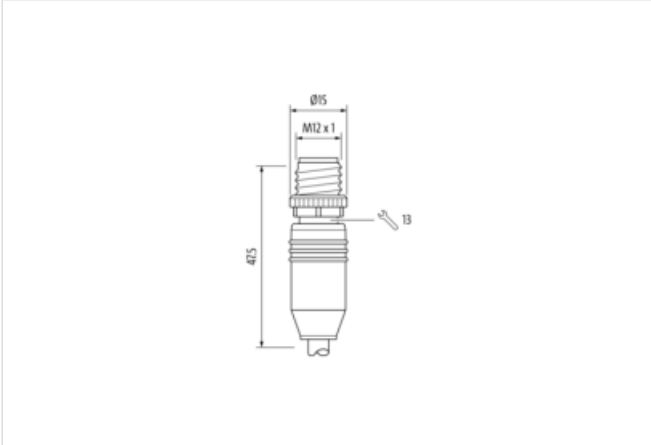

The information in this Product-PDF has been compiled with the utmost care.
Liability for the correctness completeness and topicality of the information is restricted to gross negligence. Version: 2026-07-21

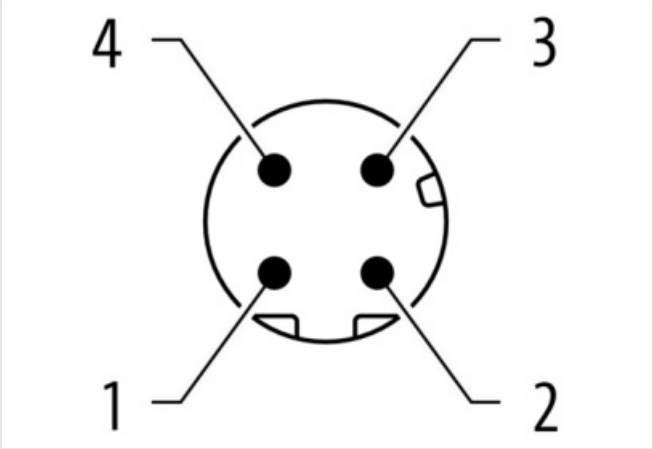

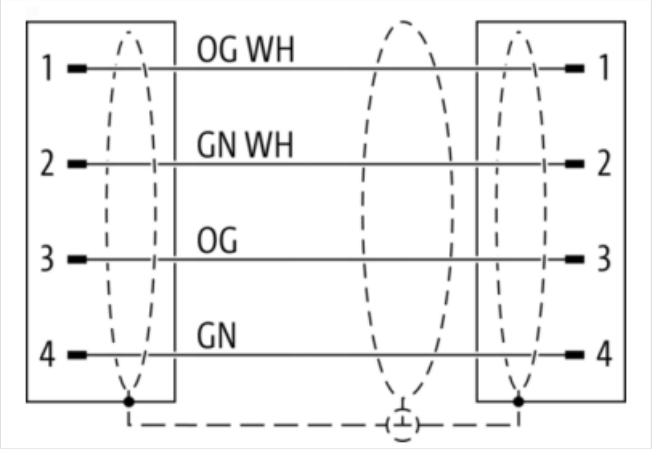

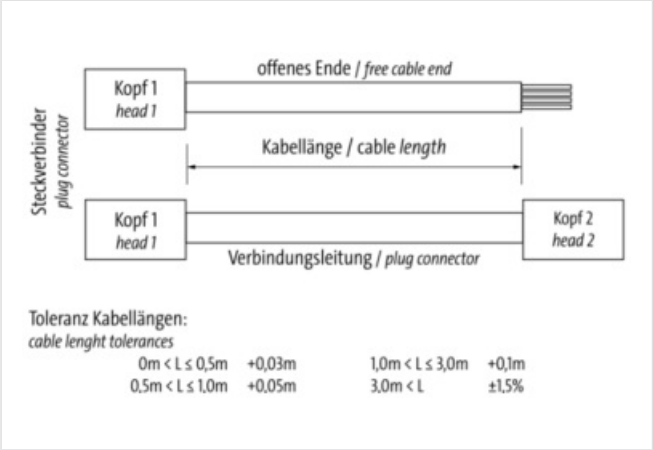

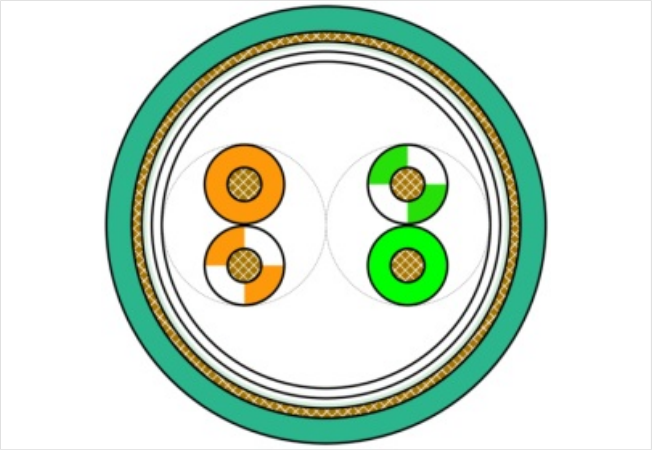

Product may differ from Image

Cable length	0,50 m
Side 1	
Family construction form	M12
No. of poles	4
Coding	D
Gender	male
Mounting method	inserted, screwed
Threaded hole	M12 x 1
Tightening torque	0,6 Nm
Width across flats	SW13
Cable outlet	straight
Material contact	Copper alloy
Coating contact	gold plated
Degree of protection (EN IEC 60529)	IP65, IP66K, IP67
Side 2	
Family construction form	M12
No. of poles	4

The information in this Product-PDF has been compiled with the utmost care.
Liability for the correctness completeness and topicality of the information is restricted to gross negligence. Version: 2026-07-21

Coding	D
Gender	male
Mounting method	inserted, screwed
Threaded hole	M12 x 1
Tightening torque	0,6 Nm
Width across flats	SW13
Cable outlet	straight
Material contact	Copper alloy
Coating contact	gold plated
Degree of protection (EN IEC 60529)	IP65, IP66K, IP67
Commercial data	
URL Webshop	https://shop.murrelektronik.com/7700-44511-S4U0050
GTIN	4065909116319
EU-Customs tariff number	85444290
US-Customs tariff number	8544429090
ECLASS-6.0	27061801
ECLASS-6.1	27060307
ECLASS-7.0	27060307
ECLASS-7.1	27060307
ECLASS-8.0	27060307
ECLASS-8.1	27060307
ECLASS-9.0	27060307
ECLASS-9.1	27060307
ECLASS-10.0.1	27060307
ECLASS-10.1	27060307
ECLASS-11.0	27060307
ECLASS-11.1	27060307
ECLASS-12.0	27060307
ECLASS-13.0	27060307
ECLASS-14.0	27060307
ETIM-5.0	EC002599
ETIM-6.0	EC002599
ETIM-7.0	EC002599
ETIM-8.0	EC002599
customs tariff number	85444290
EAN	4065909116319
Packaging unit	1
Electrical data | Supply	
Operating voltage DC max.	60 V
Current operating per contact max.	1,5 A
Current operating per contact (UL)	1,5 A
Industrial Communication	
Data transmission rate max.	100 Mbit/s
Transfer parameters	CAT5, Class D (ISO/IEC 11801:2002), (EN 50173-1)
Industrial communication | Ethernet functionality	
duplex	Full duplex
Diagnostics	
Status indication LED	No
Device protection | Electrical	
Degree of protection (EN IEC 60529)	IP67, IP66K, IP65
Additional condition protection degree	inserted, screwed

The information in this Product-PDF has been compiled with the utmost care.
Liability for the correctness completeness and topicality of the information is restricted to gross negligence. Version: 2026-07-21

Pollution Degree	3
Rated surge voltage	1,5 kV
Material group (IEC 60664-1)	I
Mechanical data	
Contour for corrugated hose	without
Mechanical data | Material data	
housing	PUR
Color housing	black
Screw connection	Zinc die-casting
Coating of fitting	nickel plated
Mechanical data | Mounting data	
Mounting method	inserted, screwed, Shaking protection
Environmental characteristics | Climatic	
Operating temperature min.	-30 °C
Operating temperature max.	85 °C
Additional condition temperature range	depending on cable quality
Important installation notes	
Note on bending radius	**Attention:** Observe the permissible bending radii when laying cables, as the IP protection class can be endangered by excessive bending forces.
Note on strain relief	Protect the connectors by suitable measures from mechanical loads, e.g. by the usage of cable ties.
Conformity	
Product standard	EN IEC 61076-2-101 (M12)
Installation | Cable	
Stranding	2 × 2 wires stranded
Stranding (type 2)	1 × 2 stranding combinations stranded
Cable shielding (type)	copper braid, tinned
Cable shielding (coverage)	75 %
Banding	Foil
Wire arrangement	(OGWH, OG), (GNWH, GN)
Shield	shielded
Material wire insulation	HDPE
Amount wires	4
Outer diameter insulation	1.22 mm ± 0.05 mm
Conductor crosssection (wire)	24 AWG
Material conductor wire	copper stranded wire, tinned
Core construction (wire)	7
Ingredient freeness wire insulation	lead-free, CFC-free
Material jacket	TPE
Outer-diameter (jacket)	6.6 mm ± 5 %
Jacket Color	blue / RAL 5018
Freedom from ingredients (jacket)	lead-free, CFC-free
Cable shielding (type)	copper braid, tinned
Cable shielding (coverage)	75 %
Conductor resistance (wire)	93.8 Ω/km @ 20 °C
Nominal voltage max.	600 V
Withstand voltage (wire - wire)	1.5 kV @ 2 s
Withstand voltage (wire - jacket)	1.5 kV @ 2 s
Current load capacity max. (wire)	2,4 A
Current load capacity (standard)	to DIN VDE 0298-4
Characteristic impedance	100 Ω ± 5 % @ 100 MHz
Loop resistance	280 Ω/km

The information in this Product-PDF has been compiled with the utmost care.
Liability for the correctness completeness and topicality of the information is restricted to gross negligence. Version: 2026-07-21

Cable type	Industrial Ethernet CAT5e
Cable length max.	83 m
Operating temperature (static)	-40 °C … 80 °C
Operating temperature (dynamic)	-40 °C … 80 °C
Oil resistance	UL 1277 (Oil Res II)
UV resistance	UL 444 § 7.22
Other resistances	resistant to welding sparks
Notes	application-related testing
Bending radius (fixed)	8 × Outer diameter
Bending radius (dynamic)	16 × Outer diameter
No. of bending cycles (C-track)	35 Mio. @ 25 °C
Traversing distance (C-track)	0.6 m @ 25 °C
Travel speed (C-track)	1.2 m/s @ 25 °C
Acceleration (C-track)	2.4 m/s² @ 25 °C
No. of torsion cycles	3 Mio.
Torsion stress	± 270 °/m
Torsion speed	60 cycles/min

The information in this Product-PDF has been compiled with the utmost care.
Liability for the correctness completeness and topicality of the information is restricted to gross negligence. Version: 2026-07-21