Specifications

Drawing No.	UKY1C-H1-25071-02[43] 1/10
Issued Date.	Jan.9,2026

TO:

Note: Part numbers may be revised in the event of any specifications change.
Not applicable for military, automotive, implantable medical use, and applications which may cause loss of life or assets.

Product Type	Quartz Crystal
Series	CX3225FB
Frequency	16,20,24,25,26,27,32,38.4,40,48,50 MHz
Customer Part Number	-
Customer Specification Number	-
KYOCERA Part Number	refer UKY1C-H1-25071-02[43] 3/10 Part Descuription
Remarks Pb-Free、RoHS Compliant、MSL 1	

Customer Approval

Approval Signature	Approved Date	
	Department	
	Person in charge	

Seller
KYOCERA Corporation
Corporate Electronic Components Group
Electronic Components Sales Division
6 Takeda Tobadono-cho, Fushimi-ku, Kyoto
612-8501 Japan
TEL. No. 075-604-3500
FAX. No. 075-604-3501

Manufacturer

Corporate Electronic Components Group
Electronic Devices Division

Design Department	Quality Assurance	Approved by	Checked by	Issued by
KYOCERA Corporation Crystal Components Application Engineering Section 2 Electronic Devices Division Corporate Electronic Components Group	A.Ito	T. Nitobe	S. Uchida	Y. Kikuchi

ATTENTION

[1] If you intend to use products on the controlling equipment that relate to medical, aeronautical, aerospace, military science, space and etc., please make sure to let us know your intentions in advance.

[2] Ultrasonic related process may cause damage to crystal blank by resonance itself. If ultrasonic related process is used, we strongly recommend to assess the damage risk under related ultrasonic conditions before use in production.

1. Electrical Specifications

1.1 General specification

#	Parameter	Value/Description	Unit	Remark
1	Nominal frequency	16,20,24,25,26,27,32,38.40,48,50	MHz	-
2	Cutting type	AT-cut	-	-
3	Oscillation mode	Fundamental	-	-
4	Moisture sensitivity level (MSL)	Level 1	-	J-STD-020
5	ESD	HBM ⩾ 2000V	-	ANSI/ESDA/JEDEC JS-001

1.2 Operation conditions

#	Parameter	Min.	Typ.	Max.	Unit	Remark
1	Operating temperature 1	-40	-	+105	°C	-
2	Storage temperature	-55	-	+125	°C	-
3	Load capacitance (C_L)	-	8.0	-	pF	-
4	Drive level	-	-	100	μW	-

1.3 Frequency stability & electrical parameters

#	Parameter	Min.	Typ.	Max.	Unit	Remark
1	Initial frequency tolerance	-10	-	+10	ppm	At 25±3°C and specific load, refer to nominal frequency
2	Frequency stability 1	-15	-	+15	ppm	Within -30°C to +85°C.
3	Frequency stability 2	-20	-	+20	ppm	Within -40°C to +85°C.
4	Frequency stability 3	-30	-	+30	ppm	Within -40°C to +105°C.
5	Shunt capacitance (C0)	-	-	-	pF	Note 1
6	Motional capacitance (C1)	-	-	-	fF	Note 1
7	Motional inductance (L1)	-	-	-	mH	Note 1
8	Frequency aging (First year)	-3	-	+3	ppm	At 25±3°C
9	Equivalent series resistance (ESR)	-	-	-	ohms	Note 1
10	insulation resistance	500	-	-	M-ohms	At DC 100V

1. Electrical Specifications (Cont.)

1.3 Frequency stability & electrical parameters (Cont.)

Note 1:

#	Part Description	ESR(ohms)	C0(pF)	C1(fF)	L1(mH)	Remark
1	CX3225FB16000D0FZZH1	50	0.67~0.99	1.65~2.47	38.52~57.76	-
2	CX3225FB20000D0FZZH1	30	0.64~0.97	2~3	20.32~30.46	-
3	CX3225FB24000D0FZZH1	40	0.88~1.32	2.84~4.26	9.92~14.88	-
4	CX3225FB25000D0FZZH1	30	0.65~1.05	2.4~3.7	10.84~16.26	-
5	CX3225FB26000D0FZZH1	30	1.12~1.66	4.29~6.43	5.48~8.22	-
6	CX3225FB27000D0FZZH1	40	0.83~1.24	3.13~4.69	7.11~10.67	-
7	CX3225FB32000D0FZZH1	30	0.9~1.34	3.58~5.36	4.44~6.64	-
8	CX3225FB38400D0FZZH1	40	0.94~1.4	3.68~5.52	3~4.48	-
9	CX3225FB40000D0FZZH1	40	0.68~1.02	2.4~3.6	4.23~6.33	-
10	CX3225FB48000D0FZZH1	30	1.31~1.95	5.12~7.68	1.38~2.06	-
11	CX3225FB50000D0FZZH1	22	1.02~1.52	3.9~5.84	1.67~2.5	-

Measure equipment: Electrical characteristics is measured by S&A 250B or equivalent.

Standard atmospheric conditions:

Unless otherwise specified, the standard environmental conditions for performance measurement and tests are under ambient temperature at (25±3)°C and relative humidity: 40% to 70%.

2. Product Design

2.1 Package dimensions and pad functions (Unit : mm)

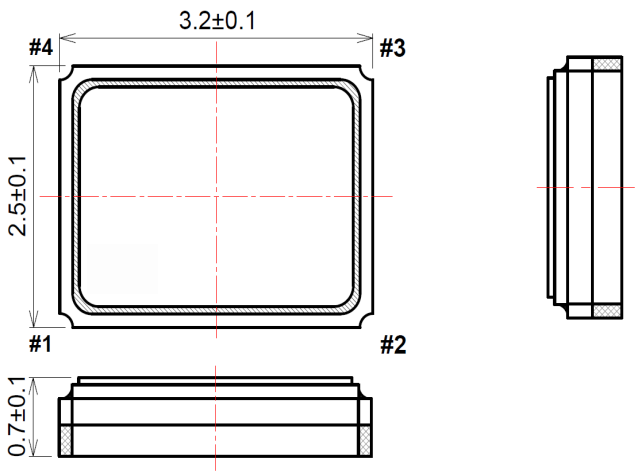

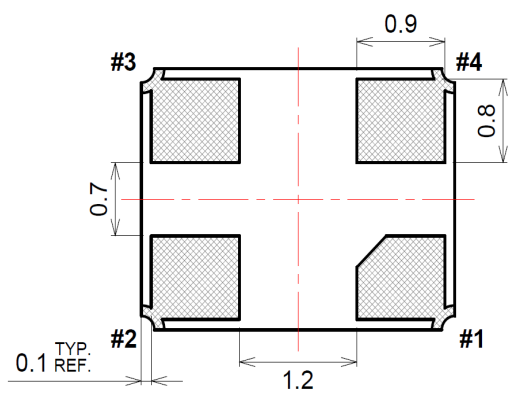

Unit : mm

Tolerance unless otherwise specified: ±0.15mm.

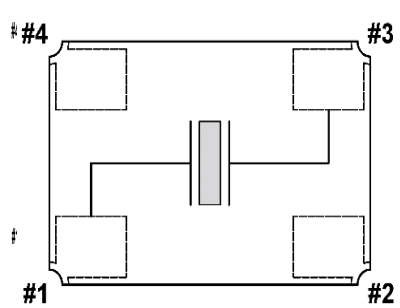

Pad	Function
#1	X'tal terminal (Input/output)
#2	GND terminal
#3	X'tal terminal (Input/output)
#4	GND terminal

2.2 Recommended land pattern (Unit : mm)

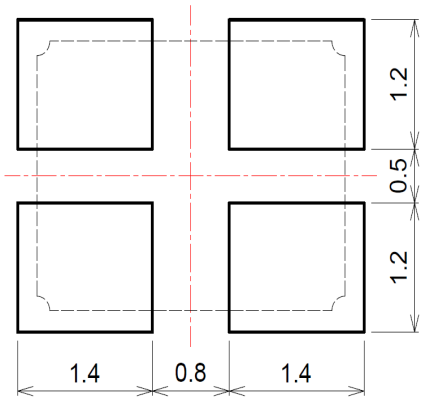

2.3 Recommended reflow profile

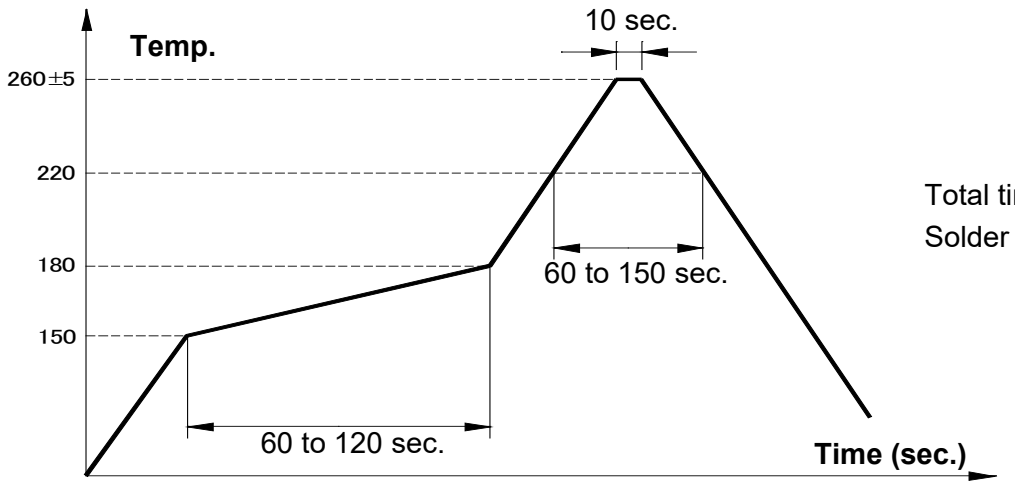

Total time : 360 sec. Max.

Solder melting point : 225°C

2. Product Design (Cont.)

2.4 Illustration to product structure

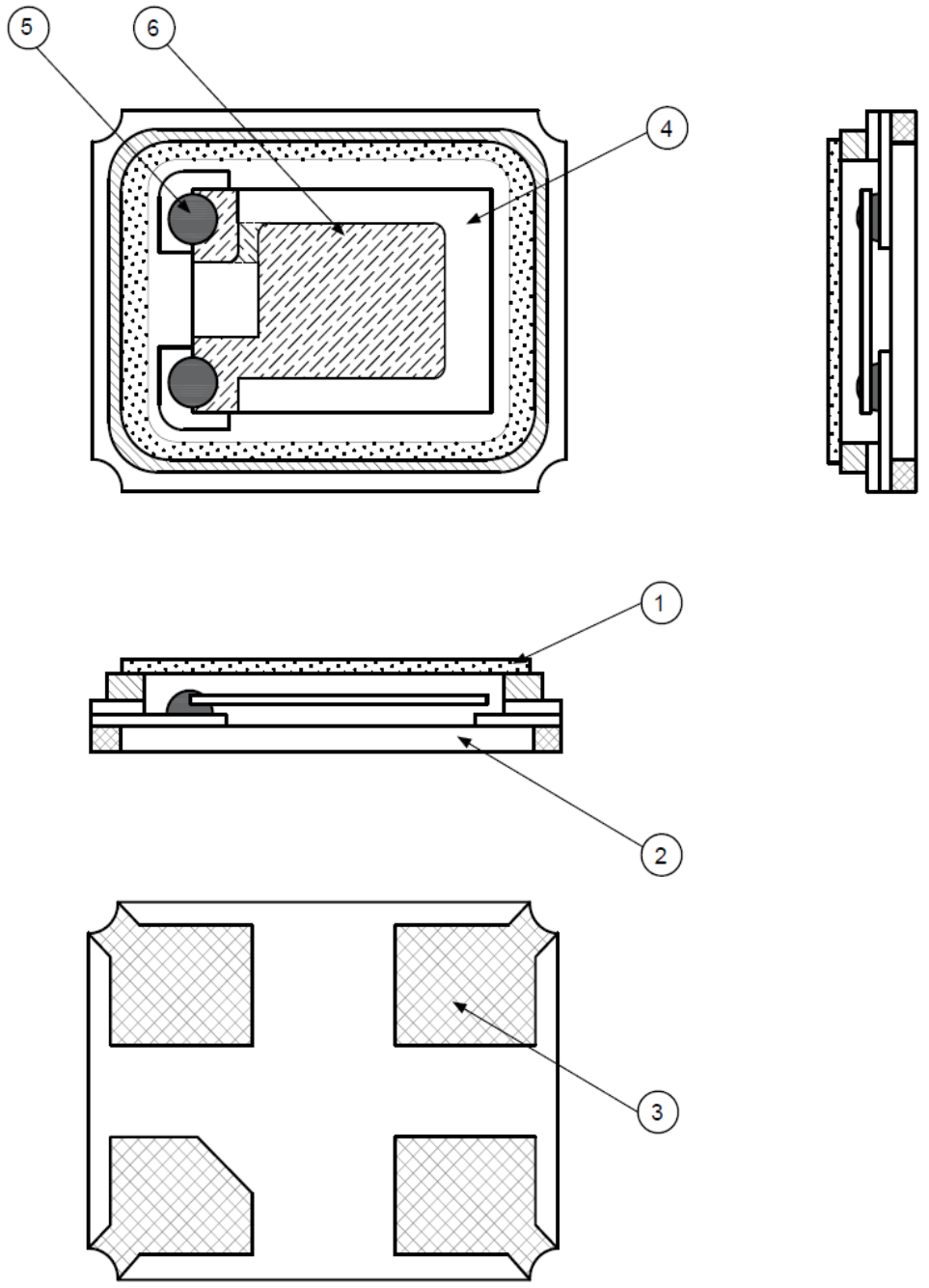

#	Components	Materials	Finish
1	Cap (Lid)	Kovar (Fe-Co-Ni)	Ni plating
2	Base (Package)	Almina ceramics (Al_2O_3)	-
3	Pad (Package)	Ni + Au	Ni + Au plating
4	Crystal blank	SiO_2	-
5	Conductive adhesive	Ag	Silicone resin
6	Electrode	Noble metal	-

3. Reliability

3.1 Mechanical endurance

#	Item	Test Condition	Reference
1	Drop test	150cm height, fall freely onto hard board 3 times	JIS C6701
2	Mechanical shock	Specimen is shocked to half sine wave, 1000 g, 0.5msec duration along three mutually perpendicular axes (±X, ±Y, and ± Z). Each direction for 3 shocks (total 18 shocks).	MIL-STD-202 Method 213
3	Vibration	Frequency range (10 to 55) Hz Amplitude 1.52 mm Test time of each perpendicular axis 2 hours (±X, ±Y, and ±Z) Total test time 6 hours	MIL-STD-202 Method 201
4	Gross leak	Standard sample for automatic gross leak detector test pressure 2kg/cm^2	MIL-STD-883 Method 1014
5	Fine leak	Helium bombing 5.0kg/cm^2 for 2 hours	MIL-STD-883 Method 1014
6	Solderability	Temperature (245 ± 5)°C Immersing depth 0.5 mm minimum Immersion time (5 ± 1) sec. Flux Rosin resin methyl alcohol solvent (1 : 4)	J-STD-002
7	Resistance to soldering heat	Test temperature (260 ± 5)°C Test time (10 ± 1) sec.	MIL-STD-202 Method 210

3. Reliability (Cont.)

3.2 Environmental endurance

#	Item	Test Condition	Reference
1	High temperature storage (Aging)	+125 °C ± 3 °C for 500 hours	MIL-STD-202 Method 108
2	Low temperature storage	-40 °C ± 3 °C for 500 hours	IEC 60068-2-1
3	Thermal shock	Total 100 cycles of the following temperature cycle 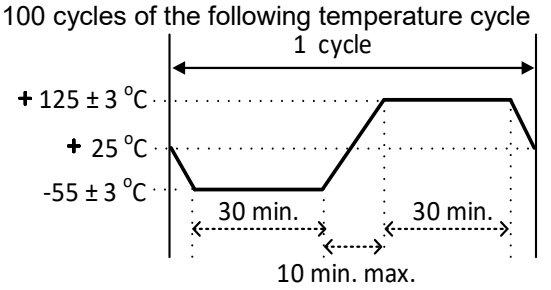	MIL-STD-883 Method 1011.9
4	High temperature & humidity	+85°C ±3°C, RH 85%, 500 hours	JIS C5023
5	High temperature operating life	1000 hours at +85°C with V_{DD} applied	MIL-STD-202 Method 108

4. Marking and Packing

4.1 Marking definition

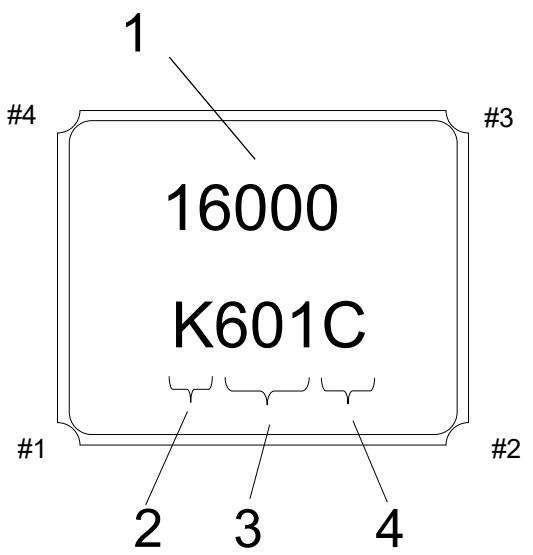

1：Nominal Frequency	First 5digit of the frequency is indicated
2：Identification	"K" is to indicate 1Pin direction
3：Date Code	Last 1 Digit of Year and Week (Ex)Jan,01,2026 →>601
4：Manufacturing Location	C...Oversea
	*The Font of marking is for reference only

4.2 Packing (EIA-481-2)

8mm-4mm，3000pcs / reel，φ178；

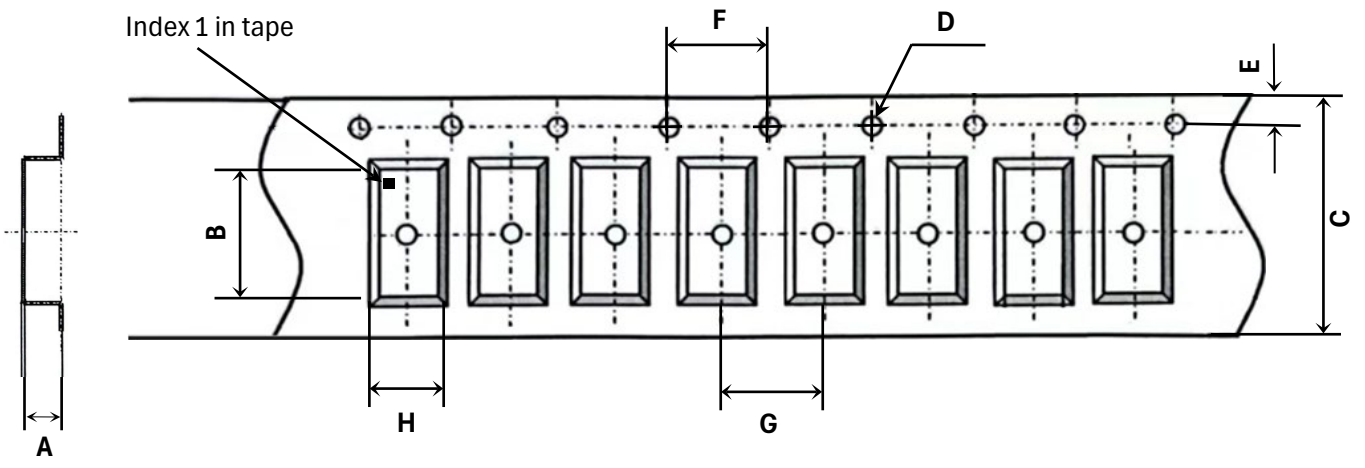

Tape dimension (Unit : mm)

A	B	C	D	E	F	G	H
1.40±0.1	3.40±0.1	8.0±0.3	1.55±0.05	1.75±0.1	4.00±0.2	4.00±0.1	2.80±0.1

4. Marking and Packing (Cont.)

4.2 Packing (EIA-481-2) (Cont.)

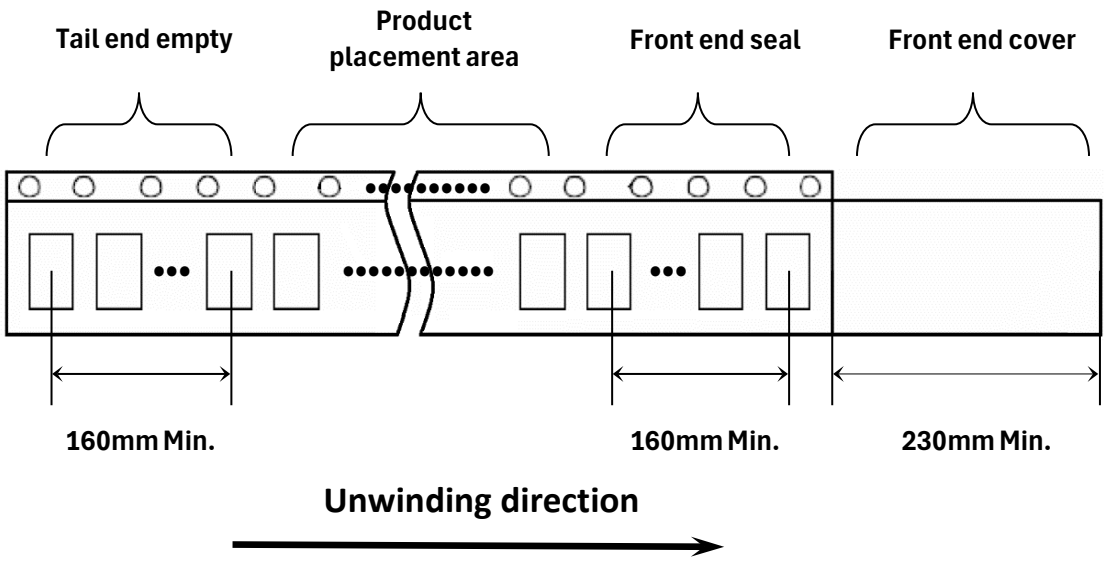

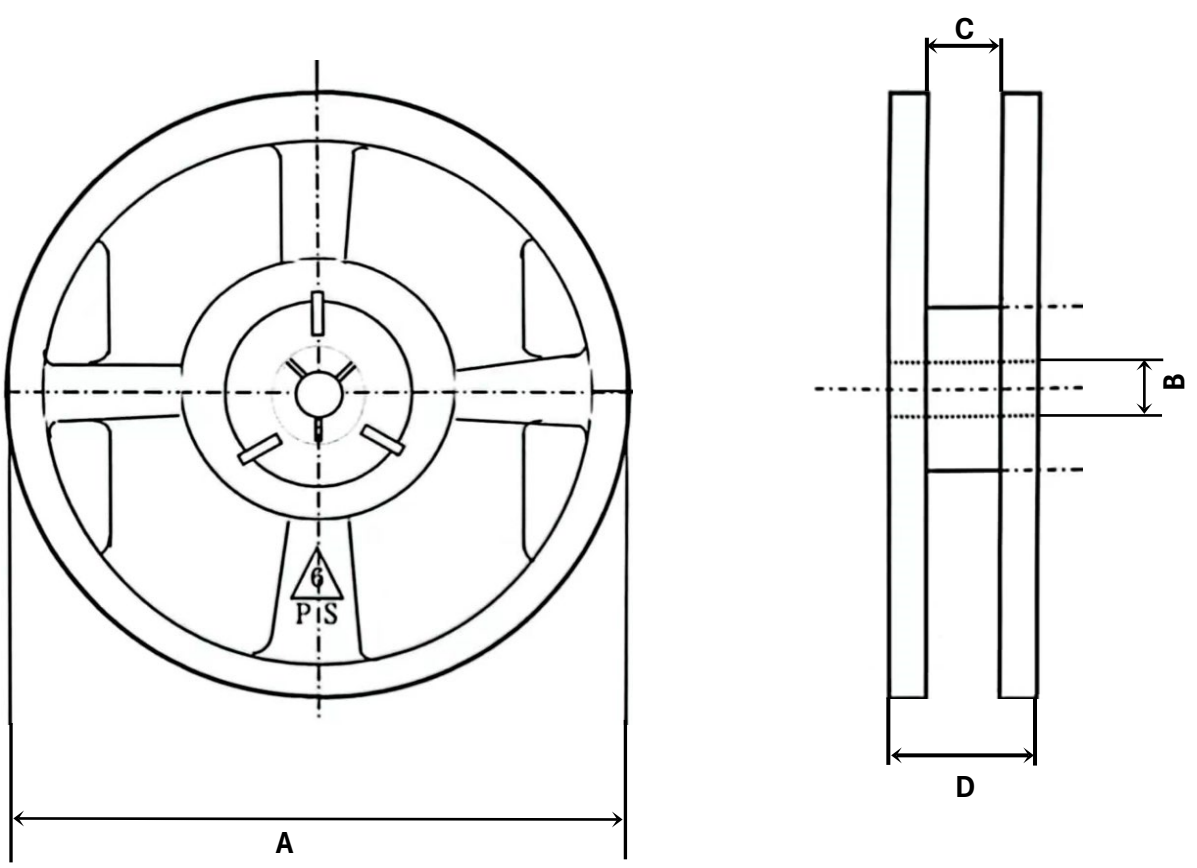

3,000 pcs/reel

Reel dimension (Unit : mm)			
A	B	C	D
178±2.0	13.2±0.5	9.0±0.5	11.5±1.4

5. Product storage conditions:

[1] Temperature: 15 to 35°C.

[2] Humidity: 30 to 70% RH.

[3] Time: within 6 months after delivery.

[4] Please store the products in a dry, clean, well-ventilated area and avoid direct sunlight exposure, heat, and vibration.

6. Quality Assurance

To be guaranteed by Kyocera Corporation Quality Assurance Division

7. Quality guarantee

In case when Kyocera Corporation rooted failure occurred within 1year after its delivery, substitute product will be arranged based on discussion. Quality guarantee of product after 1year of its delivery is waivered.

8. Others

In case of any questions or opinions regarding the Specification, please have it in written manner within 45 days after issued date.

If you do not contact us within the deadline, we will assume that the items listed are approved.