SIEMENS

Data sheet 3VA9124-0RL30



residual current device RCD820 advanced RCD type A loadside mounted rated resid. current 0.03...30A at 50/60 Hz adjustable tv 0...10000 ms 4-pole In=160 A Ue=100-690 V accessory for: 3VA2

Model	
product brand name	SENTRON
product designation	Residual current protection device type A
accessories	Residual current protection module type A
General technical data	
fastening method	screw fixing
number of poles	4
protection class IP / on the front	IP40
Voltage	
supply voltage / at AC	
● minimum	127 V
● maximum	690 V
Current	
operational current / at AC / rated value	160 A
response value / of the residual current	0.03;0.05;0.1;0.3;0.5;1;3;5;10;30
Mechanical Design	
product function / communication with residual current equipment	Yes
● product function / integrated / alarm management	Yes
● product function / integrated / alarm management	Pre-alarm indication 30% and 60%
● product function / remote-controlled tripping	Yes
● product feature / sealable	Yes
● product function / selectable tripping characteristic	No
● product function / selectable RCD or monitoring mode	Yes
position / of the infeed / on the RCD component	Top or bottom
type of electrical connection / for main current circuit	busbar connection
set values / of the limit value of not tripping time	0;0.06;0.15;0.3;0.5;1.0;2.0;3.0;5.0;10.0
type of trip indicator / electrical	Yes
type of trip indicator / communication	Yes
power loss [W] / maximum	10 W
operating frequency / rated value / maximum	60 Hz
frequency / of fault current	
● minimum	50 Hz
● maximum	60 Hz
height	115 mm
width	139.6 mm
depth	86 mm
net weight	1 641 g
ambient temperature / during operation	

Subject to change without notice
© Copyright Siemens

• minimum	-25 °C
• maximum	70 °C
ambient temperature / during storage	
• minimum	-40 °C
• maximum	80 °C
ambient temperature / during storage	
• minimum	-40 °C
• maximum	80 °C

Certificates

General Product Approval









Miscellaneous


EMV	Maritime application	other		Dangerous goods	Environment
		Confirmation	Miscellaneous	Transport Information	Environmental Con-firmations

Environment

Environmental Con-firmations

Further information

Information on the packaging
https://support.industry.siemens.com/cs/ww/en/view/109813875
Information for data generation and storage
https://support.industry.siemens.com/cs/ww/en/view/109995012
Information- and Downloadcenter (Catalogs, Brochures,…)
http://www.siemens.com/lowvoltage/catalogs
Industry Mall (Online ordering system)
https://mall.industry.siemens.com/mall/en/en/Catalog/product?mlfb=3VA9124-0RL30
Service&Support (Manuals, Certificates, Characteristics, FAQs,...)
https://support.industry.siemens.com/cs/ww/en/ps/3VA9124-0RL30
Image database (product images, 2D dimension drawings, 3D models, device circuit diagrams, ...)
http://www.automation.siemens.com/bilddb/cax_en.aspx?mlfb=3VA9124-0RL30
CAx-Online-Generator
http://www.siemens.com/cax
Tender specifications
http://www.siemens.com/specifications

Subject to change without notice
© Copyright Siemens

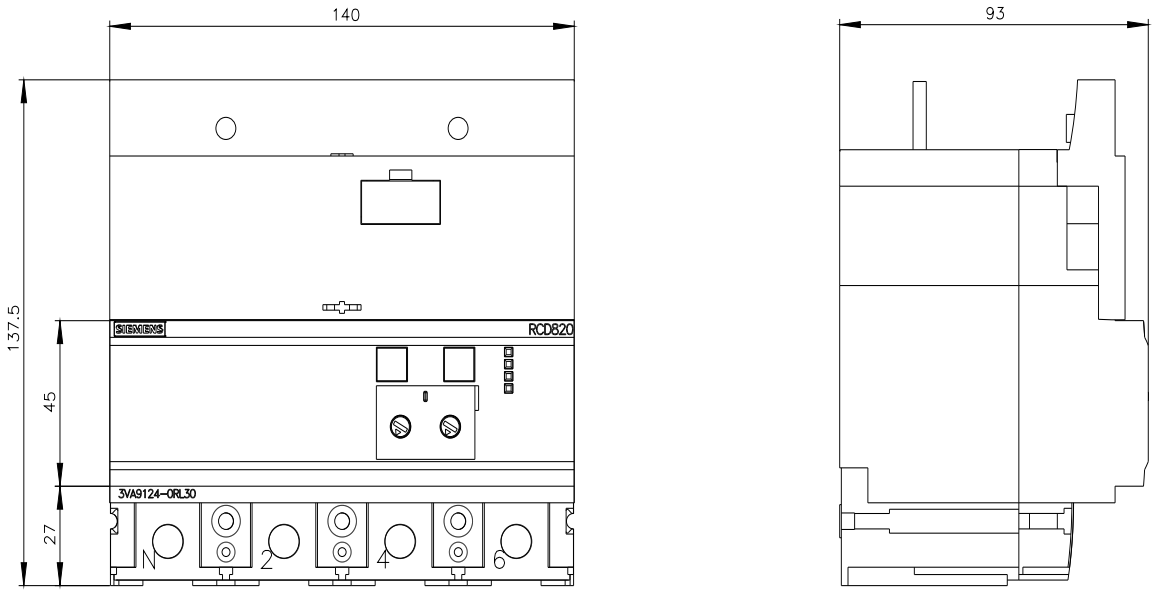

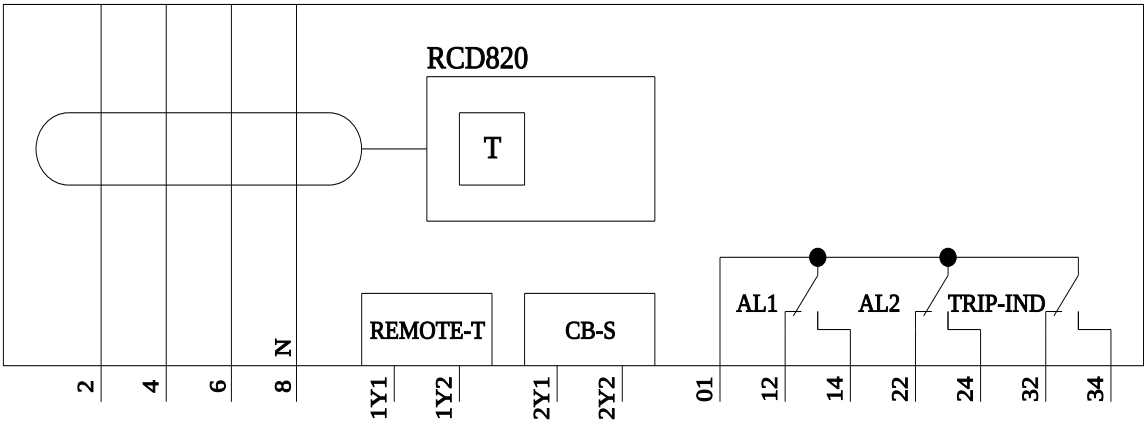

last modified: 4/3/2025

Subject to change without notice
© Copyright Siemens

Subject to change without notice
© Copyright Siemens