SIEMENS

Data sheet US2:52BL4C5



30mm BlackMax, Epoxy Coated Corrosion Resistant Complete Metal Unit Illuminated Indicator Light Full Voltage type, 12V AC/DC Incandescent Lamp, BA9s Plastic Lens, Blue UL Listed, CSA Certified NEMA 1,3,3R,4,4X,12,13 & Automotive Standards

product brand name	Siemens Pilot Devices
design of the product	Complete Unit, Round
Enclosure	
number of command points	1
delivery state as a kit	No
Actuator	
design of the actuating element	Indicator Light
product extension optional light source	Yes
color of the actuating element	blue
material of the actuating element	plastic
shape of the actuating element	Concentric rings
Front ring	
product component front ring	Yes
design of the front ring	Standard
material of the front ring	metal
color of the front ring	black
Holder	
material of the holder	metal
Contact block/ lampholder	
socket design	BA 9s, with incandescent lamp
number of lampholders	1
Display	
number of LED modules	0
General technical data	
product component	
● lamp transformer	No
● light source	Yes
degree of pollution	1
type of voltage	
● of the operating voltage	AC/DC
● of the input voltage	AC/DC
surge voltage resistance rated value	4 kV
protection class IP	IP66
protection class IP of the terminal	IP20
vibration resistance according to IEC 60068-2-6	0 ... 2000 Hz, 1.52 mm displacement (peak-to-peak) max./ 10 g max.
mechanical service life (operating cycles) typical	5
Net Weight	0.18 kg
Supply voltage	
type of voltage of the supply voltage of the light source	AC/DC

Subject to change without notice
© Copyright Siemens

supply voltage of the light source at AC at 60 Hz rated value	
●	12 V
supply voltage of the light source at DC rated value	
●	12 V
Connections/ Terminals	
type of electrical connection	screw terminal
● of modules and accessories	screw-type terminals
type of connectable conductor cross-sections for AWG cables for auxiliary contacts	1x (18 ... 12), 2x (18 ... 16), 2x (16 ... 14), 2x 12
tightening torque of the screws in the bracket maximum	20 N·m
tightening torque [lbf·in] with screw-type terminals	8 lbf·in
Lamp	
type of light source	Incandescent
color of the light source	clear
Electrical Safety	
touch protection against electrical shock	finger safe
Ambient conditions	
ambient temperature	
● during operation	-35 ... +70 °C
● during storage	-40 ... +85 °C
Installation/ mounting/ dimensions	
fastening method	
● of modules and accessories	screw-mounting
shape of the installation opening	round
Further information	

Information on the packaging
https://support.industry.siemens.com/cs/ww/en/view/109813875
Information for data generation and storage
https://support.industry.siemens.com/cs/ww/en/view/109995012
Information- and Downloadcenter (Catalogs, Brochures,…)
https://www.siemens.com/ic10
Industry Mall (Online ordering system)
https://mall.industry.siemens.com/mall/en/en/Catalog/product?mlfb=US2:52BL4C5
Cax online generator
https://support.automation.siemens.com/WW/CAXorder/default.aspx?lang=en&mlfb=US2:52BL4C5
Service&Support (Manuals, Certificates, Characteristics, FAQs,...)
https://support.industry.siemens.com/cs/ww/en/ps/US2:52BL4C5
Image database (product images, 2D dimension drawings, 3D models, device circuit diagrams, EPLAN macros, ...)
https://www.automation.siemens.com/bilddb/cax_de.aspx?mlfb=US2:52BL4C5&lang=en

© Copyright Siemens

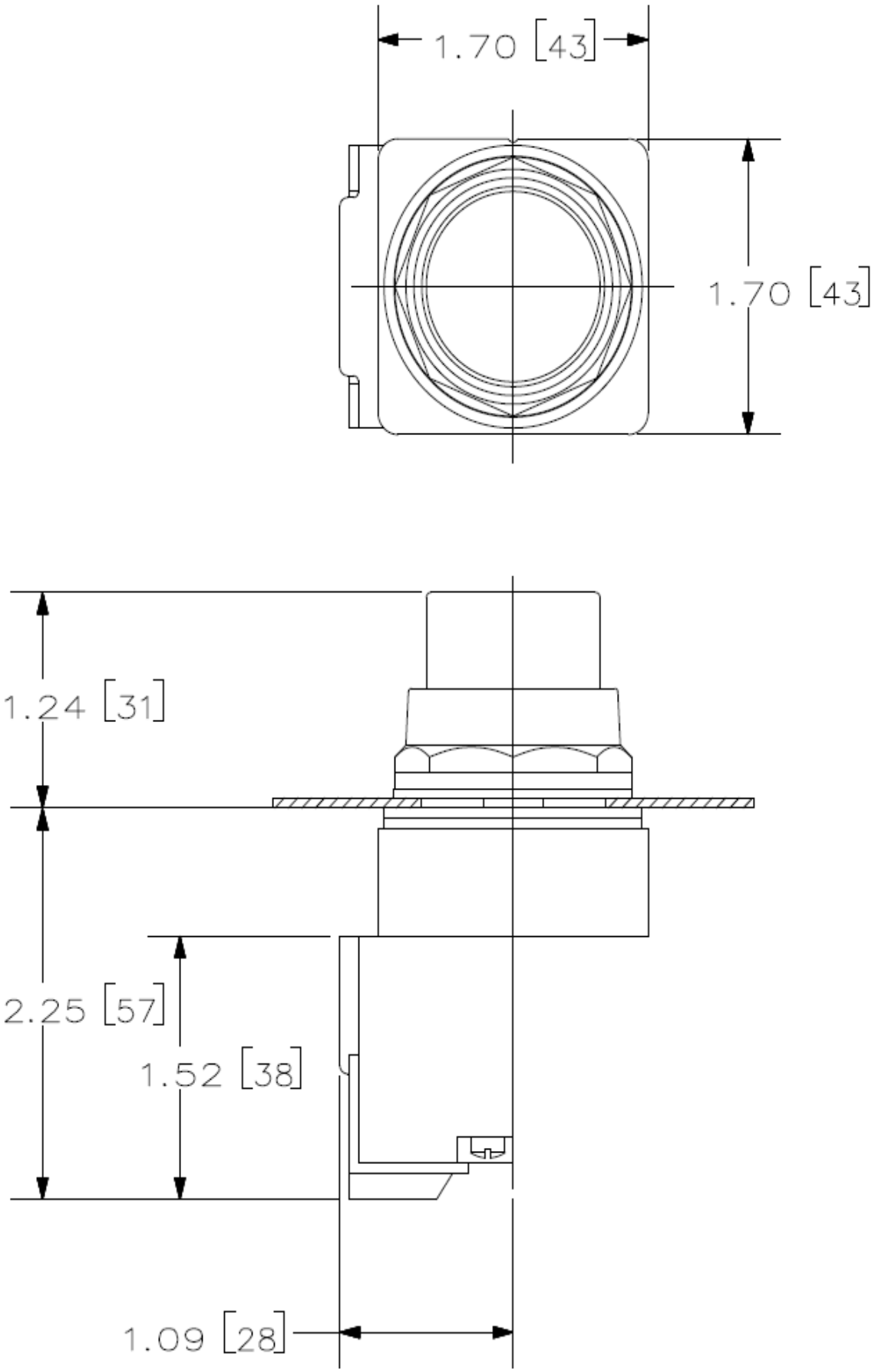

last modified: 4/6/2026

Subject to change without notice
© Copyright Siemens

Subject to change without notice
© Copyright Siemens