SIEMENS

Data sheet US2:14CUA32WH



Non-reversing motor starter, Size 0, Three phase full voltage, Solid-state overload relay, OLR amp range 0.25-1A, 380-440/440-480V 50/60Hz coil, Non-combination type, Encl. type 4X 304 S. Steel, Water/dust tight noncorrosive, Standard width enclosure

product brand name	Class 14
design of the product	direct starter
special product feature	ESP200 overload relay
General technical data	
weight [lb]	11 lb
Height x Width x Depth [in]	13 × 8 × 5 in
touch protection against electrical shock	(NA for enclosed products)
installation altitude [ft] at height above sea level maximum	6560 ft
ambient temperature [°F]	
● during storage	-22 ... +149 °F
● during operation	-4 ... +104 °F
ambient temperature	
● during storage	-30 ... +65 °C
● during operation	-20 ... +40 °C
country of origin	USA
Horsepower ratings	
yielded mechanical performance [hp] for 3-phase AC motor	
● at 200/208 V rated value	0 hp
● at 220/230 V rated value	0 hp
● at 460/480 V rated value	0 hp
● at 575/600 V rated value	1 hp
Contactor	
size of contactor	NEMA controller size 0
number of NO contacts for main contacts	3
operating voltage for main current circuit at AC at 60 Hz maximum	600 V
operational current at AC at 600 V rated value	18 A
mechanical service life (operating cycles) of the main contacts typical	10000000
Auxiliary contact	
number of NC contacts at contactor for auxiliary contacts	0
number of NO contacts at contactor for auxiliary contacts	1
number of total auxiliary contacts maximum	8
contact rating of auxiliary contacts of contactor according to UL	345VA@115VAC / 768VA@240VAC
Coil	
type of voltage of the control supply voltage	AC
control supply voltage	
● at AC at 50 Hz rated value	380 ... 440 V
● at AC at 60 Hz rated value	440 ... 480 V

Subject to change without notice
© Copyright Siemens

holding power at AC minimum	9 W
apparent pick-up power of magnet coil at AC	218 VA
apparent holding power of magnet coil at AC	25 VA
operating range factor control supply voltage rated value of magnet coil	0.85 ... 1.1
percental drop-out voltage of magnet coil related to the input voltage	50 %
ON-delay time	19 ... 29 ms
OFF-delay time	10 ... 24 ms
Overload relay	
product function	
● overload protection	Yes
● phase failure detection	Yes
● asymmetry detection	Yes
● ground fault detection	Yes
● test function	Yes
● external reset	Yes
reset function	Manual, automatic and remote
trip class	CLASS 5 / 10 / 20 (factory set) / 30
adjustable current response value current of the current-dependent overload release	0.25 ... 1 A
tripping time at phase-loss maximum	3 s
relative repeat accuracy	1 %
product feature protective coating on printed-circuit board	Yes
number of NC contacts of auxiliary contacts of overload relay	1
number of NO contacts of auxiliary contacts of overload relay	1
operational current of auxiliary contacts of overload relay	
● at AC at 600 V	5 A
● at DC at 250 V	1 A
contact rating of auxiliary contacts of overload relay according to UL	5A@600VAC (B600), 1A@250VDC (R300)
insulation voltage (Ui)	
● with single-phase operation at AC rated value	600 V
● with multi-phase operation at AC rated value	300 V
Enclosure	
degree of protection NEMA rating of the enclosure	NEMA 4x 304 stainless steel enclosure
design of the housing	Dust-tight, watertight & corrosion resistant
Mounting/wiring	
mounting position	vertical
fastening method	Surface mounting and installation
type of electrical connection for supply voltage line-side	screw terminal
tightening torque [lbf·in] for supply	20 lbf·in
type of connectable conductor cross-sections at line-side for AWG cables single or multi-stranded	1x(14 - 2 AWG)
temperature of the conductor for supply maximum permissible	75 °C
material of the conductor for supply	Al or Cu
type of electrical connection for load-side outgoing feeder	screw terminal
tightening torque [lbf·in] for load-side outgoing feeder	20 ... 24 lbf·in
type of connectable conductor cross-sections for AWG cables for load-side outgoing feeder single or multi-stranded	2 x (14 - 10 AWG)
temperature of the conductor for load-side outgoing feeder maximum permissible	75 °C
material of the conductor for load-side outgoing feeder	Cu
type of electrical connection of magnet coil	screw terminal
tightening torque [lbf·in] at magnet coil	5 ... 12 lbf·in
type of connectable conductor cross-sections of magnet coil for AWG cables single or multi-stranded	2 x (16 - 12 AWG)
temperature of the conductor at magnet coil maximum permissible	75 °C
material of the conductor at magnet coil	Cu
type of electrical connection for auxiliary contacts	screw terminal

Subject to change without notice
© Copyright Siemens

tightening torque [lbf·in] at contactor for auxiliary contacts	10 ... 15 lbf·in
type of connectable conductor cross-sections at contactor for AWG cables for auxiliary contacts single or multi-stranded	1 x (12 AWG), 2 x (16 - 14 AWG), 2 x (18 - 16 AWG)
temperature of the conductor at contactor for auxiliary contacts maximum permissible	75 °C
material of the conductor at contactor for auxiliary contacts	Cu
type of electrical connection at overload relay for auxiliary contacts	Screw terminal
tightening torque [lbf·in] at overload relay for auxiliary contacts	7 ... 10 lbf·in
type of connectable conductor cross-sections at overload relay for AWG cables for auxiliary contacts single or multi-stranded	2 x (20 - 14 AWG)
temperature of the conductor at overload relay for auxiliary contacts maximum permissible	75 °C
material of the conductor at overload relay for auxiliary contacts	Cu
Short-circuit current rating	
design of the fuse link for short-circuit protection of the main circuit required	10kA@600V (Class H or K); 100kA@600V (Class R or J)
design of the short-circuit trip	thermo magnetisch
maximum short-circuit current breaking capacity (Icu)	
• at 240 V	14 kA
• at 480 V	10 kA
• at 600 V	10 kA
certificate of suitability	NEMA ICS 2; UL 508; CSA 22.2, No.14
Approvals Certificates	
Test Certificates	

UL

Further information

Industrial Controls - Product Overview (Catalogs, Brochures,…)
www.usa.siemens.com/iccatalog
Industry Mall (Online ordering system)
https://mall.industry.siemens.com/mall/en/us/Catalog/product?mlfb=US2:14CUA32WH
Service&Support (Manuals, Certificates, Characteristics, FAQs,...)
https://support.industry.siemens.com/cs/US/en/ps/US2:14CUA32WH
Image database (product images, 2D dimension drawings, 3D models, device circuit diagrams, EPLAN macros, ...)
https://www.automation.siemens.com/bilddb/cax_de.aspx?mlfb=US2:14CUA32WH&lang=en
Certificates/approvals
https://support.industry.siemens.com/cs/US/en/ps/US2:14CUA32WH/certificate

Subject to change without notice
© Copyright Siemens

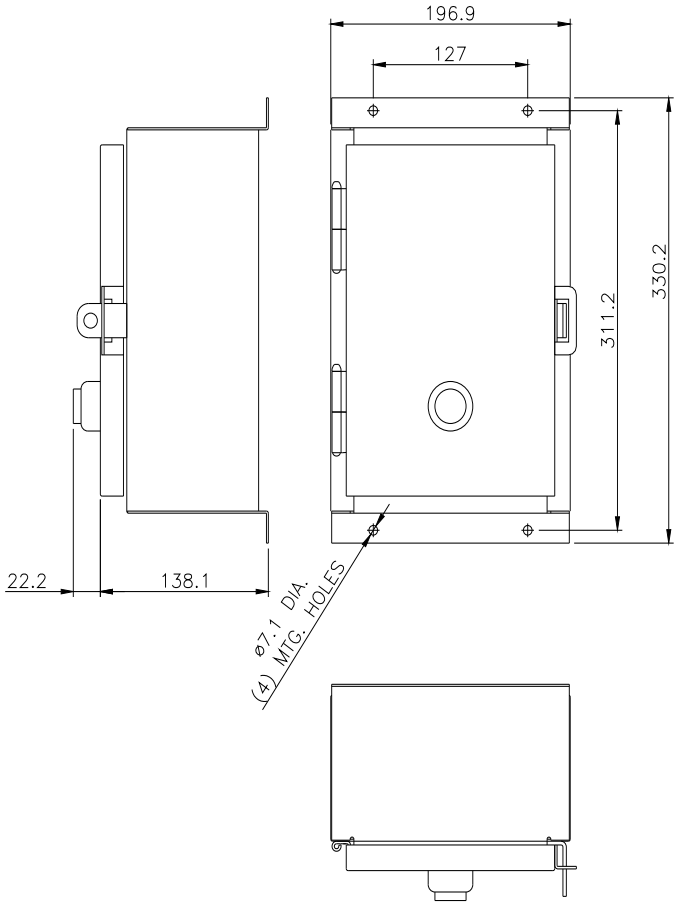

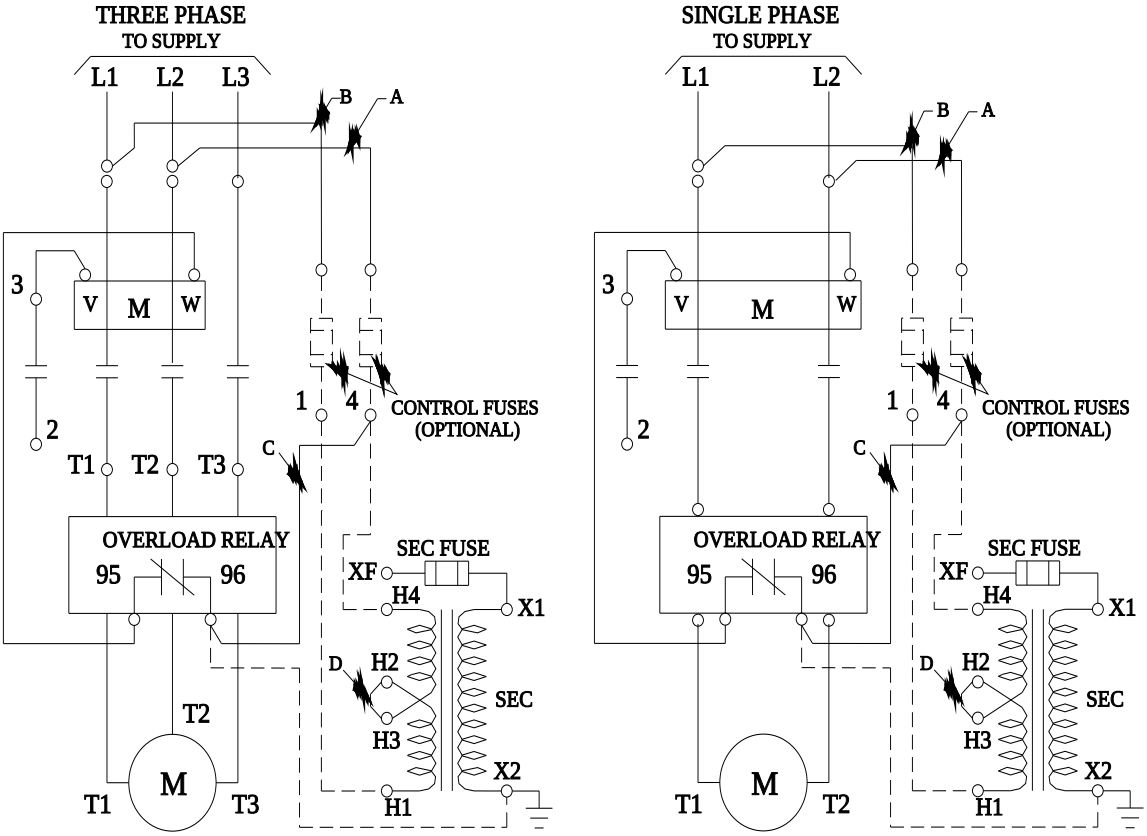

last modified: 7/26/2026

Subject to change without notice
© Copyright Siemens

Subject to change without notice
© Copyright Siemens