SIEMENS

Data sheet 4AM6542-8DD40-0FD0



Figure similar

transformer SITAS; phases: 1; Pn/Pn(S6)(kVA): 1.875 /13.3; Upri(V): 550-525-500-480-460- 440-415-400-380-230-208; Usec(V): 2x115; Isec(A): 8.15-16.3; F(Hz): 50...60; vector group/shielding winding: II0 /0; temperature rise/insulation class: 40 /B; IP54; connection: screw/flat-type connection; mounting: screws; EN 61558-2-1, -2-2, -2-4 >UL/CSA-recognized< >control transformer< >isolation transformer<

General technical data		
product designation		transformer SITAS
product brand name		SIDAC
operating apparent power rated value	V·A	1 880
efficiency		0.96
connection method for transformers		Ii0
certificate of suitability		CE / cRUus
product function		
● temperature monitoring		No
● insulation monitoring		No
● short-circuit and overload proof		No
number of shielding windings		0
short-term vector power	V·A	13 300
relative short-circuit voltage	%	1.6
Inputs		
phase number of the inputs		1
input voltage		
● _1 rated value	V	550
● _2 rated value	V	525
● _3 rated value	V	500
● _4 rated value	V	480
● _5 rated value	V	460
● _6 rated value	V	440
● _7 rated value	V	415
● _8 rated value	V	400
● _9 rated value	V	380
● _10 rated value	V	230
● _11 rated value	V	208
electrical input frequency		
● minimum	Hz	50
● maximum	Hz	60
Outputs		
phase number of the outputs		1
output voltage		
● _1 rated value	V	230
● _2 rated value	V	115
electrical output frequency		
● maximum	Hz	60

Subject to change without notice
© Copyright Siemens

● minimum	Hz	50
Ambient conditions		
thermal class according to IEC 60085		B
ambient temperature rated value	°C	40
protection class IP		IP54
Mechanical data		
type of electrical connection		
● at output for main current circuit		screw-type terminals / tab terminals
● at input for main current circuit		screw-type terminals / tab terminals
fastening method		screws
construction form of the iron core		EI 192/110
width	m	0.351
height	m	0.395
depth	m	0.33

Certificates/ approvals

General Product Approval	other	Environment
	Confirmation	Environmental Confirmations

Further information

Information on the packaging
https://support.industry.siemens.com/cs/ww/en/view/109813875
Information for data generation and storage
https://support.industry.siemens.com/cs/ww/en/view/109995012
Information- and Downloadcenter (Catalogs, Brochures,…)
https://www.siemens.com/ic10
Industry Mall (Online ordering system)
https://mall.industry.siemens.com/mall/en/en/Catalog/product?mlfb=4AM6542-8DD40-0FD0
Cax online generator
https://support.automation.siemens.com/WW/CAXorder/default.aspx?lang=en&mlfb=4AM6542-8DD40-0FD0
Service&Support (Manuals, Certificates, Characteristics, FAQs,...)
https://support.industry.siemens.com/cs/ww/en/ps/4AM6542-8DD40-0FD0
Image database (product images, 2D dimension drawings, 3D models, device circuit diagrams, EPLAN macros, ...)
https://www.automation.siemens.com/bilddb/cax_de.aspx?mlfb=4AM6542-8DD40-0FD0&lang=en

Subject to change without notice
© Copyright Siemens

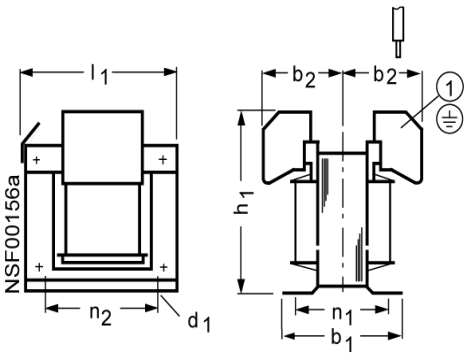

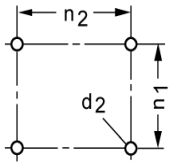

(1) Cage-Clamp-Anschluss

24 A:	eindrähtig	0,08	bis	4 mm²
	feindrähtig	0,08	bis	4 mm²

Typ	Bemes-sungs-leistung kVA [1]	Bezeichnung nach DIN 41 302	b_1	b_2	d_1	d_2	h_1	l_1	n_1	n_2
4AM23	0,025	EI 60/20	50	39	3,6 x 6	M 3	75	62	39	44
4AM26	0,04	EI 66/22	56	40	4,8 x 8	M 4	79	68	45	50
4AM32	0,063	EI 84/28	86	45	4,8 x 8,4	M 4	97	86	65	64
4AM34	0,1	EI 84/42	86	51	4,8 x 8,4	M 4	97	86	65	64
4AM38	0,16	EI 96/44	102	52	5,8 x 9	M 5	106	98	86	84
4AM40	0,25	EI 96/58	102	59	5,8 x 9	M 5	106	98	87	84
4AM43	0,315	EI 105/60	103	60	5,8 x 9	M 5	111	107	84	81
4AM46	0,4	EI 120/52	102	57	5,8 x 9	M 5	121	122	85	90
4AM48	0,5	EI 120/72	123	67	5,8 x 9	M 5	121	122	104	90
4AM52	0,63	EI 150N/48	111	55	7 x 13	M 6	144	152	90	122
4AM55	0,8	EI 150N/65	128	63	7 x 13	M 6	144	152	106	122
4AM57	1	EI 150N/90	154	66	7 x 13	M 6	144	152	130	122
4AM61	1,6	EI 174/82	155	69	7 x 15	M 6	164	176	112	145
4AM64	2	EI 174/102	177	79	7 x 15	M 6	164	176	149	145
4AM65	2,5	EI 192/110	188	88	9 x 16	M 8	180	194	156	160

1) Die Bemessungsleistung gilt nur für Transformatoren mit getrennten Wicklungen (nicht bei Spartransformatoren).

last modified: 4/2/2025

Subject to change without notice
© Copyright Siemens