SIEMENS

Data sheet 3SF1324-1SF21-1BA4



safety position switch with tumbler, locking force 1300 N, 5 directions of approaches, plastic enclosure, M12 plug, ASIsafe integrated, channel 1=actuator 2 NC according to principle of 2v2 evaluation channel 2=magnet 1 NC, spring-locked, escape release on front, magnet voltage 24 V AC/DC; no additional 24 V supply required. monitoring actuator 2 NC/1 NO monitoring magnet 2 NC/1 NO the matching separate actuator 3SE5000-0AV0./-0AW5. must be ordered separately.

product brand name	SIRIUS
product designation	Mechanical safety switches
design of the product	with separate actuator and with tumbler
product type designation	3SF13
manufacturer's article number of the optional actuators	3SE5000-0AV01 standard actuator, 3SE5000-0AV02 actuator with vertical mounting, 3SE5000-0AV03 actuator with transverse mounting, 3SE5000-0AV04 radius actuator left, 3SE5000-0AV05 universal actuator, 3SE5000-0AV06 radius actuator right, 3SE5000-0AV07 heavy duty actuator
General technical data	
product function positive opening	Yes
locking force	1 300 N
● according to EN ISO 14119	1 000 N
insulation voltage rated value	30 V
degree of pollution	class 3
surge voltage resistance rated value	0.8 kV
shock resistance	30g / 11 ms
● according to IEC 60068-2-27	30 g / 11 ms
vibration resistance	0.35 mm / 5 g
● according to IEC 60068-2-6	0.35 mm/5 g
mechanical service life (operating cycles) typical	1 000 000
material of the enclosure of the switch head	plastic
reference code according to IEC 81346-2	B
repeat accuracy	0.1 mm
Substance Prohibitance (day/month/year)	03/01/2017
SVHC substance name	Lead monoxide (lead oxide) CAS-No. 1317-36-8 2-methyl-1-(4-methylthiophenyl)-2-morpholinopropan-1-one CAS-No. 71868-10-5 Melamine CAS-No. 108-78-1 6,6'-di-tert-butyl-2,2'-methylenedi-p-cresol CAS-No. 119-47-1 Diboron trioxide CAS-No. 1303-86-2
Net Weight	0.407 kg
minimum actuating force in directions of actuation	30 N
Ambient conditions	
ambient temperature	
● during operation	-25 ... +60 °C
● during storage	-40 ... +80 °C
Enclosure	
design of the housing	special design
material of the enclosure	plastic
design of the housing according to standard	No
locking mechanism design	spring-actuated lock (closed-circuit principle) escape release from the front

Subject to change without notice
© Copyright Siemens

Drive Head	
design of the actuating element	5 directions of approach
design of the switching function	positive opening
number of directions of actuation	5
design of plug-in connection	M12 plug, 4-pole: Pin 1 = ASI+ , Pin 2 = not assigned, Pin 3= ASI-, Pin 4 = not assigned
Installation/ mounting/ dimensions	
mounting position	any
fastening method	screw fixing
Connections/ Terminals	
type of electrical connection	M12 plug, fixed
Supply voltage	
supply voltage of magnet coil	24 V
Communication/ Protocol	
design of the interface	M12 plug, fixed
Safety related data	
proportion of dangerous failures with high demand rate according to SN 31920	20 %
B10 value with high demand rate according to SN 31920	1 000 000
Approvals Certificates	

General Product Approval				other	
				Miscellaneous	Confirmation

other	Dangerous goods	Environment	Industrial Communication
	Transport Information	Environmental Confirmations	

Further information

Information on the packaging
https://support.industry.siemens.com/cs/ww/en/view/109813875
Information for data generation and storage
https://support.industry.siemens.com/cs/ww/en/view/109995012
Information- and Downloadcenter (Catalogs, Brochures,…)
https://www.siemens.com/ic10
Industry Mall (Online ordering system)
https://mall.industry.siemens.com/mall/en/en/Catalog/product?mlfb=3SF1324-1SF21-1BA4
Cax online generator
https://support.automation.siemens.com/WW/CAXorder/default.aspx?lang=en&mlfb=3SF1324-1SF21-1BA4
Service&Support (Manuals, Certificates, Characteristics, FAQs,...)
https://support.industry.siemens.com/cs/ww/en/ps/3SF1324-1SF21-1BA4
Image database (product images, 2D dimension drawings, 3D models, device circuit diagrams, EPLAN macros, ...)
https://www.automation.siemens.com/bilddb/cax_de.aspx?mlfb=3SF1324-1SF21-1BA4&lang=en

© Copyright Siemens

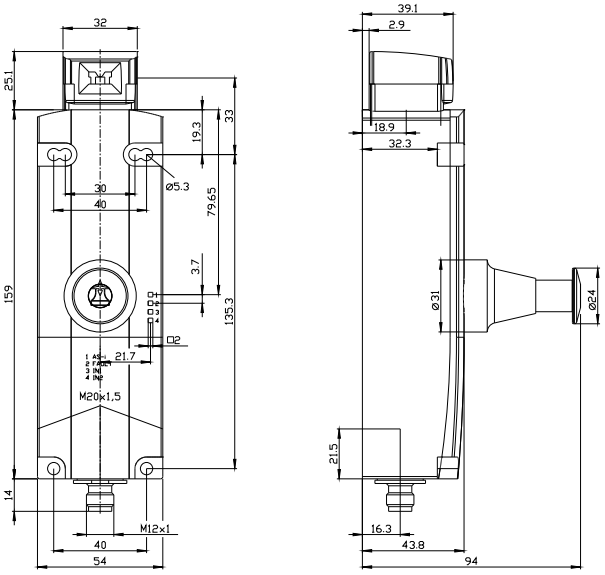

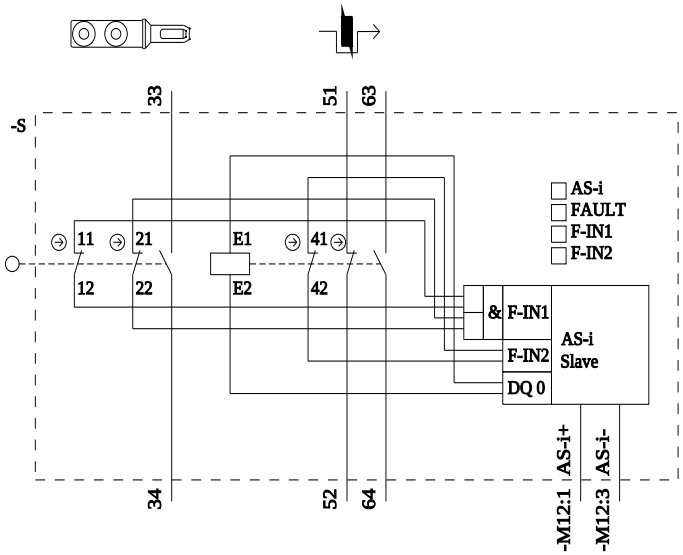

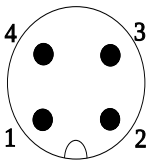

1	→	ASI +
2	→	n. c.
3	→	ASI -
4	→	n. c.

last modified: 4/4/2026

Subject to change without notice
© Copyright Siemens