SIEMENS

Data sheet 3SE5132-0LE05



Position switch Plastic enclosure 40 mm according to EN 50041 Device connection 1 x (M20 x 1.5) 1 NO/2 NC quick action contacts Roller lever made of metal and Plastic roller 22 mm

product brand name	SIRIUS
product designation	Mechanical position switches
product type designation	3SE5
manufacturer's article number	
● of the supplied basic switch	3SE5132-0LA00
● of the supplied actuator head for position switches	3SE5000-0AE05
● of the supplied switching contacts	3SE5000-0LA00
● of the supplied empty enclosure with cover	3SE5132-0AA00
General technical data	
product function positive opening	Yes
insulation voltage rated value	400 V
degree of pollution	class 3
surge voltage resistance rated value	6 kV
protection class IP	IP66/IP67
shock resistance	
● **according to IEC 60068-2-27**	30 g / 11 ms
vibration resistance according to IEC 60068-2-6	0.35 mm/5 g
mechanical service life (operating cycles) typical	15 000 000
electrical endurance (operating cycles) at AC-15 at 230 V typical	100 000
thermal current	10 A
material of the enclosure of the switch head	plastic
reference code according to IEC 81346-2	B
continuous current of the C characteristic MCB	1 A; for a short-circuit current smaller than 400 A
continuous current of the quick DIAZED fuse link	10 A; for a short-circuit current smaller than 400 A
continuous current of the DIAZED fuse link gG	6 A
active principle	mechanical
repeat accuracy	0.05 mm
Substance Prohibitance (day/month/year)	07/01/2006
SVHC substance name	Imidazolidine-2-thione (2-imidazoline-2-thiol) CAS-No. 96-45-7
Net Weight	0.106 kg
minimum actuating force in directions of actuation	10 N
length of the sensor	119 mm
width of the sensor	40 mm
Ambient conditions	
ambient temperature	
● during operation	-25 ... +85 °C
● during storage	-40 ... +90 °C
explosion protection category for dust	none
Main circuit	

Subject to change without notice
© Copyright Siemens

design of the switching contact	mechanical
operating frequency rated value	50 ... 60 Hz
number of NC contacts for auxiliary contacts	2
number of NO contacts for auxiliary contacts	1
operational current at AC-15	
● at 24 V rated value	6 A
● at 125 V rated value	6 A
● at 240 V rated value	6 A
● at 400 V rated value	4 A
operational current at DC-13	
● at 24 V rated value	3 A
● at 125 V rated value	0.55 A
● at 250 V rated value	0.27 A
● at 400 V rated value	0.12 A
Enclosure	
design of the housing	block, narrow
material of the enclosure	plastic
coating of the enclosure	Other types
design of the housing according to standard	Yes
Drive Head	
design of the actuating element	Roller lever, metal lever, plastic roller
standard-compliant actuator head	EN 50041
shape of the switch head	roller
design of the switching function	positive opening
circuit principle	snap-action contacts
number of switching contacts safety-related	2
cable entry type	1x (M20 x 1.5)
Installation/ mounting/ dimensions	
mounting position	any
fastening method	screw fixing
Connections/ Terminals	
type of electrical connection	screw terminal
type of connectable conductor cross-sections	
● solid	1x (0.5 ... 1.5 mm²), 2x (0.5 ... 0.75 mm²)
● finely stranded with core end processing	1x (0.5 ... 1.5 mm²), 2x (0.5 ... 0.75 mm²)
● for AWG cables solid	1x (20 ... 16), 2x (20 ... 18)
● for AWG cables stranded	1x (20 ... 16), 2x (20 ... 18)
design of the interface for safety-related communication	without
Communication/ Protocol	
design of the interface	without
Safety related data	
product function suitable for safety function	Yes
service life maximum	20 a
test wear-related service life necessary	Yes
proportion of dangerous failures	
● with low demand rate according to SN 31920	20 %
● with high demand rate according to SN 31920	20 %
B10 value with high demand rate according to SN 31920	1 000 000
failure rate [FIT] with low demand rate according to SN 31920	100 FIT
ISO 13849	
device type according to ISO 13849-1	3
IEC 61508	
safety device type according to IEC 61508-2	A
Approvals Certificates	
General Product Approval	**other**

© Copyright Siemens

Confirmation

other	Environment

Environmental Confirmations

Further information

Information on the packaging
https://support.industry.siemens.com/cs/ww/en/view/109813875
Information for data generation and storage
https://support.industry.siemens.com/cs/ww/en/view/109995012
Information- and Downloadcenter (Catalogs, Brochures,…)
https://www.siemens.com/ic10
Industry Mall (Online ordering system)
https://mall.industry.siemens.com/mall/en/en/Catalog/product?mlfb=3SE5132-0LE05
Cax online generator
https://support.automation.siemens.com/WW/CAXorder/default.aspx?lang=en&mlfb=3SE5132-0LE05
Service&Support (Manuals, Certificates, Characteristics, FAQs,...)
https://support.industry.siemens.com/cs/ww/en/ps/3SE5132-0LE05
Image database (product images, 2D dimension drawings, 3D models, device circuit diagrams, EPLAN macros, ...)
https://www.automation.siemens.com/bilddb/cax_de.aspx?mlfb=3SE5132-0LE05&lang=en

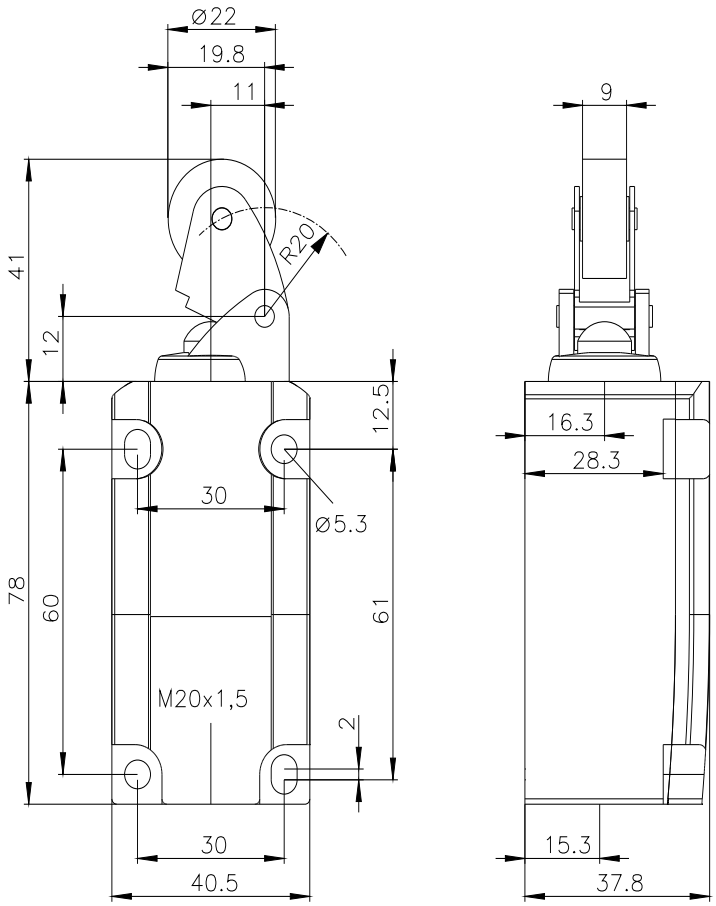

Subject to change without notice
© Copyright Siemens

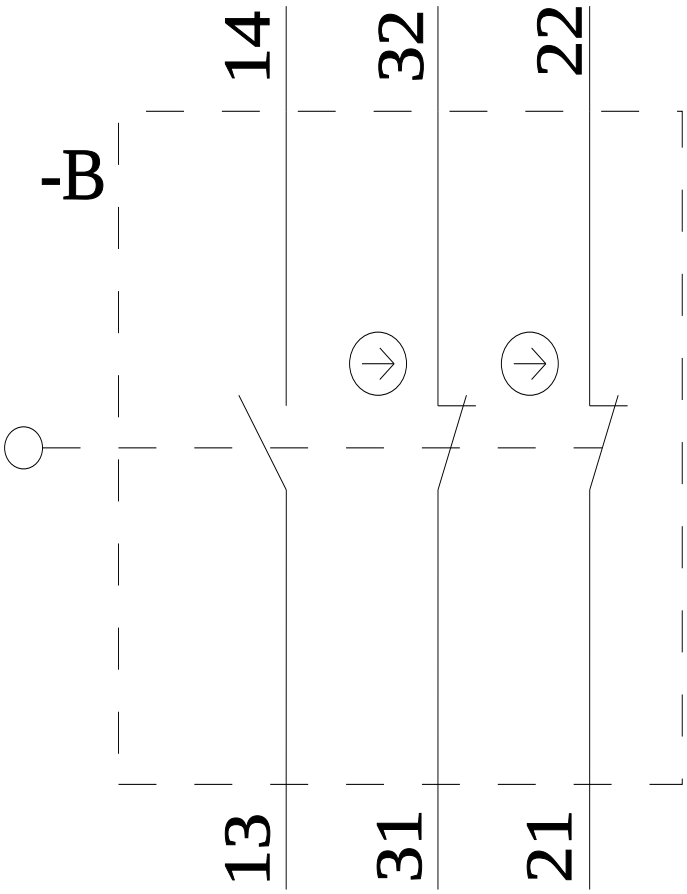

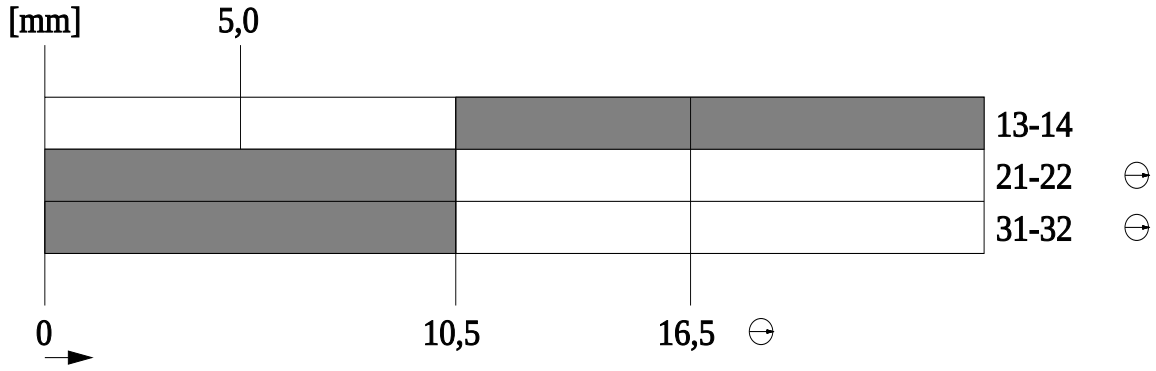

last modified: 4/4/2026

Subject to change without notice
© Copyright Siemens