SIEMENS

Data sheet 3RV1923-1DA00



Figure similar

molded-plastic enclosure for surface mounting degree of protection IP55 with N and PE terminal can be locked in O position 72 mm with metric cable bushing no UL/CSA approval

product brand name	SIRIUS
product category	Enclosure
product designation	Molded-plastic enclosure for surface mounting
design of the product	Assembly
product type designation	3RV19
General technical data	
product function EMERGENCY OFF function	No
protection class IP of the enclosure	IP55
Substance Prohibitance (day/month/year)	07/01/2006
Net Weight	0.338 kg
material of the enclosure	plastic
Installation/ mounting/ dimensions	
height	155 mm
width	105 mm
depth	126 mm

Approvals Certificates

Environment	General Product Approval			Test Certificates	
Environmental Confirmations	EAC	CE EG-Konf.	UKCA	Type Test Certificates/Test Report	Special Test Certificate

Maritime application		other			
ABS	BUREAU VERITAS	Miscellaneous	Confirmation	Miscellaneous	产品合格 QC PASS

Railway
Special Test Certificate

Further information

Subject to change without notice
© Copyright Siemens

Information on the packaging
https://support.industry.siemens.com/cs/ww/en/view/109813875
Information for data generation and storage
https://support.industry.siemens.com/cs/ww/en/view/109995012
Information- and Downloadcenter (Catalogs, Brochures,…)
https://www.siemens.com/ic10
Industry Mall (Online ordering system)
https://mall.industry.siemens.com/mall/en/en/Catalog/product?mlfb=3RV1923-1DA00
Cax online generator
https://support.automation.siemens.com/WW/CAXorder/default.aspx?lang=en&mlfb=3RV1923-1DA00
Service&Support (Manuals, Certificates, Characteristics, FAQs,...)
https://support.industry.siemens.com/cs/ww/en/ps/3RV1923-1DA00
Image database (product images, 2D dimension drawings, 3D models, device circuit diagrams, EPLAN macros, ...)
https://www.automation.siemens.com/bilddb/cax_de.aspx?mlfb=3RV1923-1DA00&lang=en

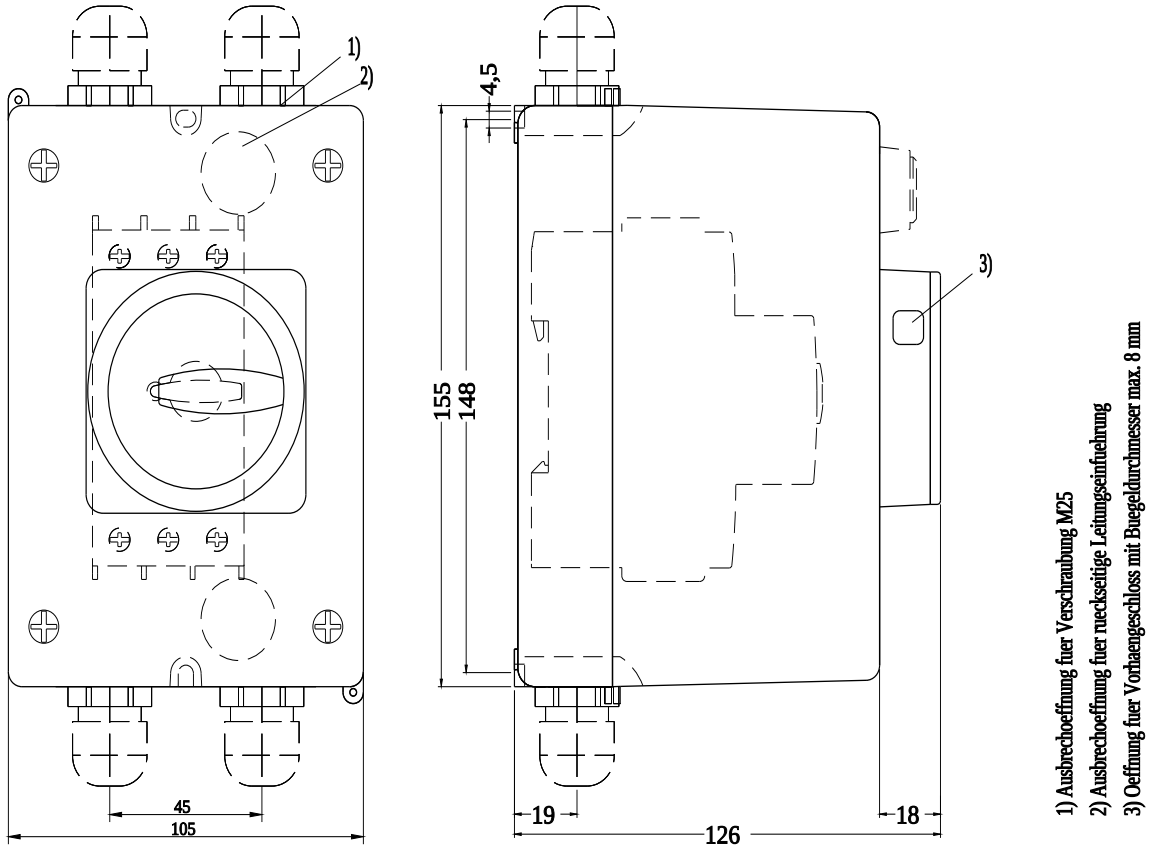

last modified: 10/18/2025

Subject to change without notice
© Copyright Siemens