SIEMENS

Data sheet 3RV1011-1KA10



Circuit breaker size S00 for motor protection, CLASS 10 A-release 9...12 A N-release 156 A Screw terminal Standard switching capacity

product brand name	SIRIUS
product designation	Circuit breaker
design of the product	For motor protection
product type designation	3RV1
General technical data	
Product equipment of circuit breaker for motor protection complete unit with protection device	Yes
size of the circuit-breaker	S00
size of contactor can be combined company-specific	S00
product function disconnector functionality	Yes
product extension auxiliary switch	Yes
power loss [W] for rated value of the current	
● at AC in hot operating state	9.25 W
● at AC in hot operating state per pole	3.1 W
type of calculation of power loss current-dependent	quadratic
insulation voltage with degree of pollution 3 at AC rated value	690 V
surge voltage resistance rated value	6 kV
maximum permissible voltage for protective separation	
● in networks with ungrounded star point between main and auxiliary circuit	400 V
● in networks with grounded star point between main and auxiliary circuit	400 V
protection class IP	
● on the front according to IEC 60529	IP20
● on the front	IP20
● of the terminal	IP00
mechanical service life (operating cycles)	
● of the main contacts typical	100 000
● of auxiliary contacts typical	100 000
electrical endurance (operating cycles) typical	100 000
reference code according to IEC 81346-2	Q
continuous current rated value	12 A
Substance Prohibitance (day/month/year)	01/01/2013
Net Weight	247.6 g
Ambient conditions	
installation altitude at height above sea level maximum	2 000 m
ambient temperature	
● during operation	-20 ... +60 °C
● during storage	-50 ... +80 °C
● during transport	-50 ... +80 °C

Subject to change without notice
© Copyright Siemens

temperature compensation	-20 ... +60 °C
relative humidity during operation	10 ... 95 %
Main circuit	
number of poles for main current circuit	3
adjustable current response value current of the current-dependent overload release	9 ... 12 A
type of voltage for main current circuit	AC
operating voltage	
● rated value	690 V
● rated value	20 ... 690 V
● at AC-3 rated value maximum	690 V
● at AC-3e rated value maximum	690 V
operating frequency rated value	50 ... 60 Hz
operational current rated value	12 A
operational current	
● at AC-3 at 400 V rated value	12 A
● at AC-3e at 400 V rated value	12 A
operating power	
● at AC-3	
— at 230 V rated value	3 kW
— at 400 V rated value	5.5 kW
— at 500 V rated value	5.5 kW
— at 690 V rated value	7.5 kW
● at AC-3e	
— at 230 V rated value	3 kW
— at 400 V rated value	5.5 kW
— at 500 V rated value	5.5 kW
— at 690 V rated value	7.5 kW
operating frequency	
● at AC-3 maximum	15 1/h
● at AC-3e maximum	15 1/h
Auxiliary circuit	
type of voltage for auxiliary and control circuit	AC/DC
number of NC contacts for auxiliary contacts	0
number of NO contacts for auxiliary contacts	0
number of CO contacts for auxiliary contacts	0
Protective and monitoring functions	
product function	
● ground fault detection	No
● phase failure detection	Yes
trip class	CLASS 10
design of the overload release	thermal
protection function thermal overload protection (ANSI 49)	Yes
maximum short-circuit current breaking capacity (Icu)	
● at AC at 240 V rated value	100 kA
● at AC at 400 V rated value	50 kA
● at AC at 500 V rated value	3 kA
● at AC at 690 V rated value	2 kA
operating short-circuit current breaking capacity (Ics) at AC	
● at 240 V rated value	100 kA
● at 400 V rated value	12.5 kA
● at 500 V rated value	3 kA
● at 690 V rated value	2 kA
response value current of instantaneous short-circuit trip unit	156 A
UL/CSA ratings	
full-load current (FLA) for 3-phase AC motor	
● at 480 V rated value	12 A
● at 600 V rated value	12 A
yielded mechanical performance [hp]	

Subject to change without notice
© Copyright Siemens

● for single-phase AC motor	
— at 110/120 V rated value	0.5 hp
— at 230 V rated value	2 hp
● for 3-phase AC motor	
— at 200/208 V rated value	3 hp
— at 220/230 V rated value	3 hp
— at 460/480 V rated value	8 hp
— at 575/600 V rated value	10 hp
Short-circuit protection	
product function short circuit protection	Yes
design of the short-circuit trip	magnetic
design of the fuse link for IT network for short-circuit protection of the main circuit	
● at 240 V	gG 80 A
● at 400 V	gG 80 A
● at 500 V	gG 50 A
● at 690 V	gG 50 A
certificate of suitability according to ATEX directive 2014/34/EU	DMT 02 ATEX F 001
type of protection according to ATEX directive 2014/34/EU	Ex II (2) GD
Installation/ mounting/ dimensions	
mounting position	any
fastening method	screw and snap-on mounting onto 35 mm DIN rail according to DIN EN 60715
Mounting method of circuit breaker for Transformer protection, Generator protection and system protection optional standard bar mounting	Yes
height	90 mm
width	45 mm
depth	75 mm
required spacing	
● for grounded parts at 400 V	
— downwards	20 mm
— upwards	20 mm
— at the side	9 mm
● for live parts at 400 V	
— downwards	20 mm
— upwards	20 mm
— at the side	9 mm
● for grounded parts at 500 V	
— downwards	20 mm
— upwards	20 mm
— at the side	9 mm
● for live parts at 500 V	
— downwards	20 mm
— upwards	20 mm
— at the side	9 mm
● for grounded parts at 690 V	
— downwards	20 mm
— upwards	20 mm
— backwards	0 mm
— at the side	9 mm
— forwards	0 mm
● for live parts at 690 V	
— downwards	20 mm
— upwards	20 mm
— backwards	0 mm
— at the side	9 mm
— forwards	0 mm
Connections/ Terminals	
product component removable terminal for auxiliary and control circuit	No

Subject to change without notice
© Copyright Siemens

type of electrical connection	
● for main current circuit	screw-type terminals
arrangement of electrical connectors for main current circuit	Top and bottom
type of connectable conductor cross-sections	
● for main contacts	
— solid or stranded	2x (0,5 ... 1,5 mm²), 2x (0,75 ... 2,5 mm²), 2x (1 ... 4 mm²)
— finely stranded with core end processing	2x (0.5 ... 1.5 mm²), 2x (0.75 ... 2.5 mm²)
connectable conductor cross-section for main contacts	
● solid or stranded	0.5 ... 4 mm²
● finely stranded with core end processing	0.5 ... 2.5 mm²
type of connectable conductor cross-sections	
● for auxiliary contacts	
— solid or stranded	2x (0.5 ... 1.5 mm²), 2x (0.75 ... 2.5 mm²)
AWG number as coded connectable conductor cross section for main contacts	18 ... 14
tightening torque	
● for main contacts with screw-type terminals	0.8 ... 1.2 N·m
● for auxiliary contacts with screw-type terminals	0.8 ... 1.2 N·m
design of screwdriver shaft	Diameter 5 to 6 mm
size of the screwdriver tip	Pozidriv size 2
design of the thread of the connection screw	
● for main contacts	M3
Safety related data	
product function suitable for safety function	Yes
suitability for use	
● safety-related switching on	No
● safety-related switching OFF	Yes
service life maximum	10 a
test wear-related service life necessary	Yes
proportion of dangerous failures	
● with low demand rate according to SN 31920	40 %
● with high demand rate according to SN 31920	50 %
B10 value with high demand rate according to SN 31920	5 000
failure rate [FIT] with low demand rate according to SN 31920	50 FIT
ISO 13849	
device type according to ISO 13849-1	3
overdimensioning according to ISO 13849-2 necessary	Yes
IEC 61508	
safety device type according to IEC 61508-2	Type A
Electrical Safety	
protection class IP on the front according to IEC 60529	IP20
touch protection on the front according to IEC 60529	finger-safe, for vertical contact from the front
Display	
display version for switching status	Rocker switch
Approvals Certificates	

Environment	General Product Approval				
Environmental Confirmations	CCC		EAC		CE EG-Konf.

General Product Approval	For use in hazardous locations	Test Certificates

Subject to change without notice
© Copyright Siemens

Type Test Certific-ates/Test Report | Special Test Certific-ate

Maritime application	other
	Miscellaneous

other	Railway
Confirmation, Miscellaneous	Special Test Certific-ate

Further information

Information on the packaging
https://support.industry.siemens.com/cs/ww/en/view/109813875
Information for data generation and storage
https://support.industry.siemens.com/cs/ww/en/view/109995012
Information- and Downloadcenter (Catalogs, Brochures,…)
https://www.siemens.com/ic10
Industry Mall (Online ordering system)
https://mall.industry.siemens.com/mall/en/en/Catalog/product?mlfb=3RV1011-1KA10
Service&Support (Manuals, Certificates, Characteristics, FAQs,...)
https://support.industry.siemens.com/cs/ww/en/ps/3RV1011-1KA10
Image database (product images, 2D dimension drawings, 3D models, device circuit diagrams, EPLAN macros, ...)
https://www.automation.siemens.com/bilddb/cax_de.aspx?mlfb=3RV1011-1KA10&lang=en
Cax online generator
https://support.automation.siemens.com/WW/CAXorder/default.aspx?lang=en&mlfb=3RV1011-1KA10
Kennlinien
https://curves.simaris.siemens.com/curves/3RV1011-1KA10

Subject to change without notice
© Copyright Siemens

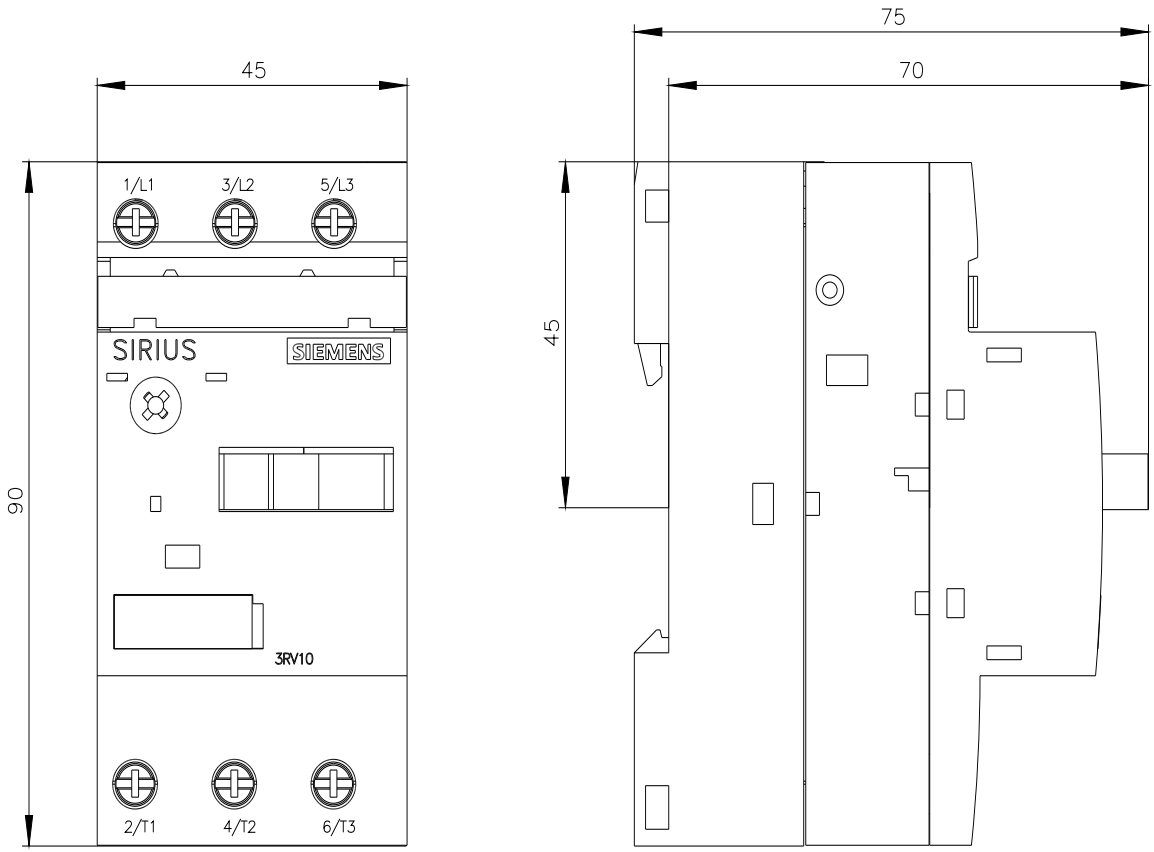

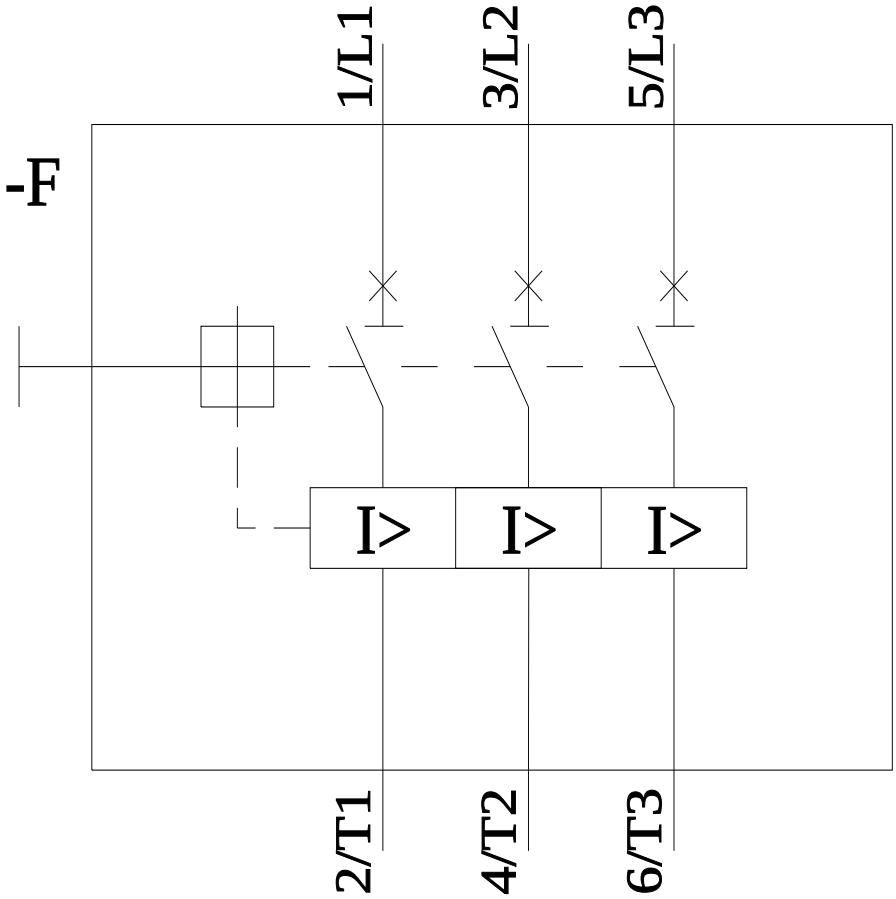

last modified: 5/5/2026

Subject to change without notice
© Copyright Siemens

Subject to change without notice
© Copyright Siemens