SIEMENS

Data sheet 3LD9343-7C

selector switch, red / yellow 48x48 mm Front plate mounting Central hole mounting 22.5mm for shaft 6x6 mm, accessory for Load disconnector 3LD3

Model	
product brand name	SENTRON
product designation	knob
degree of protection NEMA rating	other
suitability for use switch disconnector	Yes
suitability for use circuit breaker	No
suitability for use EMERGENCY OFF switch	Yes
color	red / yellow
● of the actuating element	red / yellow
product feature can be locked in ON position	No
● **Product component with axis**	No
● product component restart inhibit function block	No
● product component padlock locking mechanism	No
● product component key lock	No
product feature can be locked into OFF position	Yes
number of bracket locks maximum	2
hasp thickness of the bracket locks	4 ... 6 mm
Net Weight	65.5 g

Approvals Certificates

Environment		General Product Approval	
Environmental Confirmations	Environmental Confirmations		Confirmation

General Product Approval	other
	Confirmation

Further information

Information on the packaging
https://support.industry.siemens.com/cs/ww/en/view/109813875
Information for data generation and storage
https://support.industry.siemens.com/cs/ww/en/view/109995012

Subject to change without notice
© Copyright Siemens

Information- and Downloadcenter (Catalogs, Brochures,…)
https://www.siemens.com/lowvoltage/catalogs
Industry Mall (Online ordering system)
https://mall.industry.siemens.com/mall/en/en/Catalog/product?mlfb=3LD9343-7C
Service&Support (Manuals, Certificates, Characteristics, FAQs,...)
https://support.industry.siemens.com/cs/ww/en/ps/3LD9343-7C
Image database (product images, 2D dimension drawings, 3D models, device circuit diagrams, ...)
https://www.automation.siemens.com/bilddb/cax_en.aspx?mlfb=3LD9343-7C
CAx-Online-Generator
https://www.siemens.com/cax
Tender specifications
https://www.siemens.com/specifications
Kennlinien
https://curves.simaris.siemens.com/curves/3LD9343-7C

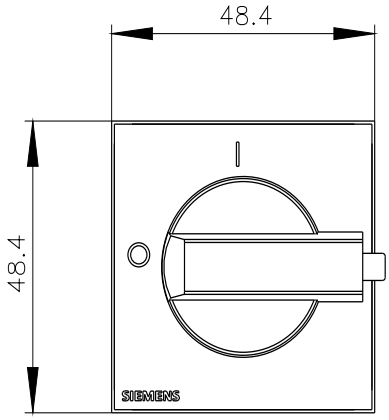

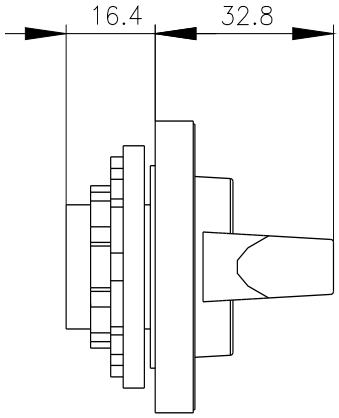

last modified: 3/7/2026

Subject to change without notice
© Copyright Siemens

Subject to change without notice
© Copyright Siemens