SIEMENS

## Data sheet 3LD9343-5C

selector switch, red / yellow 48x48 mm Front plate mounting Central hole mounting 22.5mm with coupling part for shaft 6x6 mm, accessory for Load disconnector 3LD3

| Model | |
|---|---|
| **product brand name** | SENTRON |
| **product designation** | knob |
| **degree of protection NEMA rating** | other |
| **suitability for use switch disconnector** | Yes |
| **suitability for use circuit breaker** | No |
| **suitability for use EMERGENCY OFF switch** | Yes |
| **color** | red / yellow |
| ● of the actuating element | red / yellow |
| **product feature can be locked in ON position** | No |
| ● **Product component with axis** | No |
| ● product component restart inhibit function block | No |
| ● product component padlock locking mechanism | No |
| ● product component key lock | No |
| **product feature can be locked into OFF position** | Yes |
| **number of bracket locks maximum** | 2 |
| **hasp thickness of the bracket locks** | 4 ... 6 mm |
| **Net Weight** | 77 g |

**Approvals Certificates**

| Environment | | General Product Approval | |
|---|---|---|---|
| Environmental Confirmations | Environmental Confirmations | | Confirmation |

| General Product Approval | other |
|---|---|
| | Confirmation |

**Further information**

**Information on the packaging**
https://support.industry.siemens.com/cs/ww/en/view/109813875
**Information for data generation and storage**
https://support.industry.siemens.com/cs/ww/en/view/109995012


Subject to change without notice
© Copyright Siemens

**Information- and Downloadcenter (Catalogs, Brochures,…)**
https://www.siemens.com/lowvoltage/catalogs
**Industry Mall (Online ordering system)**
https://mall.industry.siemens.com/mall/en/en/Catalog/product?mlfb=3LD9343-5C
**Service&Support (Manuals, Certificates, Characteristics, FAQs,...)**
https://support.industry.siemens.com/cs/ww/en/ps/3LD9343-5C
**Image database (product images, 2D dimension drawings, 3D models, device circuit diagrams, ...)**
https://www.automation.siemens.com/bilddb/cax_en.aspx?mlfb=3LD9343-5C
**CAx-Online-Generator**
https://www.siemens.com/cax
**Tender specifications**
https://www.siemens.com/specifications
**Kennlinien**
https://curves.simaris.siemens.com/curves/3LD9343-5C

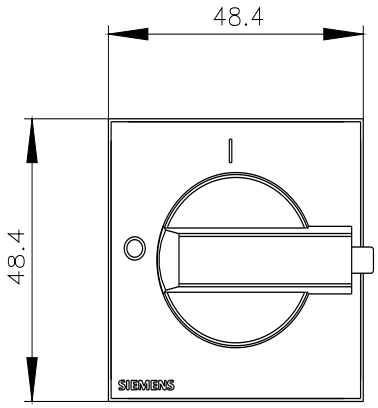


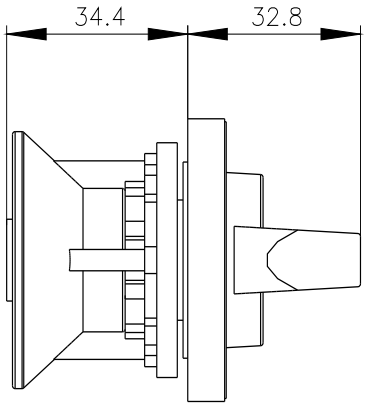


**last modified:** 3/7/2026


Subject to change without notice
© Copyright Siemens

Subject to change without notice
© Copyright Siemens