SIEMENS

Data sheet 3LD9287-3C

Supplementary handle for door mounted rotary operating mechanism, Red/yellow, up to 30A, accessory for molded case switch 3LD5 UL

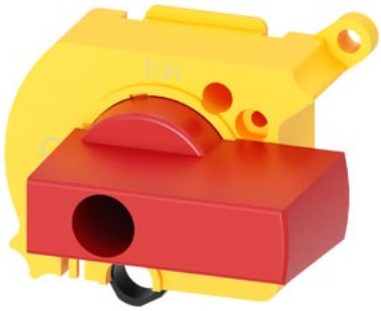

Model	
product brand name	SENTRON
product designation	Supplementary handle for door mounted rotary operator
design of the product	accessories for 3LD50 switch disconnectors
product feature can be locked into OFF position	Yes
Accessories	
accessories	red/yellow
Mechanical Design	
Net Weight	65 g

Approvals Certificates

Environment		General Product Approval		
Environmental Confirmations	Environmental Confirmations	EPD	CSA	UL	EAC

General Product Approval		other	
Confirmation	CE EG-Konf. UKCA	Confirmation	产品合格 QC PASS

Further information

Information on the packaging
https://support.industry.siemens.com/cs/ww/en/view/109813875
Information for data generation and storage
https://support.industry.siemens.com/cs/ww/en/view/109995012
Information- and Downloadcenter (Catalogs, Brochures,…)
https://www.siemens.com/lowvoltage/catalogs
Industry Mall (Online ordering system)
https://mall.industry.siemens.com/mall/en/en/Catalog/product?mlfb=3LD9287-3C
Service&Support (Manuals, Certificates, Characteristics, FAQs,...)
https://support.industry.siemens.com/cs/ww/en/ps/3LD9287-3C
Image database (product images, 2D dimension drawings, 3D models, device circuit diagrams, ...)
https://www.automation.siemens.com/bilddb/cax_en.aspx?mlfb=3LD9287-3C
CAx-Online-Generator
https://www.siemens.com/cax
Tender specifications
https://www.siemens.com/specifications
Kennlinien
https://curves.simaris.siemens.com/curves/3LD9287-3C

Subject to change without notice
© Copyright Siemens

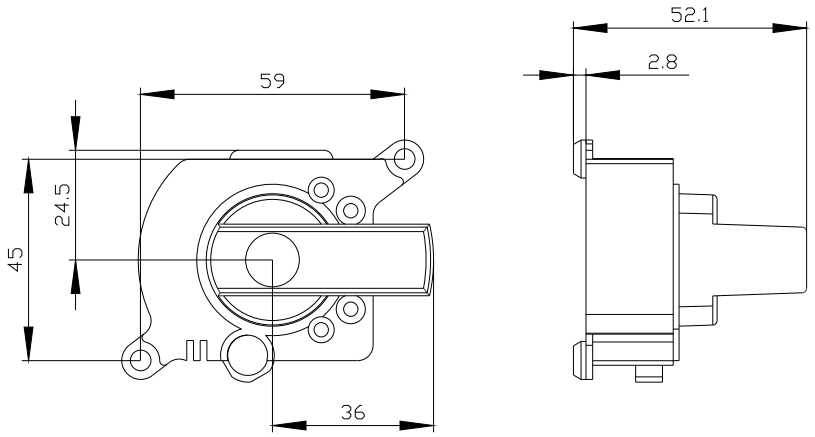

last modified: 4/12/2025

Subject to change without notice
© Copyright Siemens

Subject to change without notice
© Copyright Siemens