SIEMENS

Data sheet 3LD2203-1TL51



SENTRON, switch disconnector 3LD, main switch, 4-pole, Iu: 32 A, operating power / at AC-23 A at 400 V: 11.5 kW, front-mounted, rotary operating mechanism, black, 4-hole mounting of the handle

Model	
product brand name	SENTRON
product designation	Switch disconnector
design of the product	Main switch
display version for switch position indicator manual operation	1 ON - 0 OFF
type of switch	front mounted
design of the actuating element	Short rotary knob
color of the actuating element	black
design of handle	rotary operating mechanism, black
type of the driving mechanism motor drive	No
General technical data	
number of poles	4
size of switch disconnector	2
mechanical service life (operating cycles) typical	100 000
electrical endurance (operating cycles)	
● at AC-23 A at 690 V	6 000
operating frequency maximum	50 1/h
degree of pollution	3
Voltage	
insulation voltage rated value	690 V
surge voltage resistance rated value	6 kV
operating voltage	
● at AC rated value	690 V
operating frequency rated value	
● minimum	50 Hz
● maximum	60 Hz
Protection class	
protection class IP	IP65
degree of protection NEMA rating	1, 3R, 4X, 12
protection class IP on the front	IP65
Dissipation	
power loss [W] for rated value of the current at AC in hot operating state per pole	0.98 W
Main circuit	
operational current	
● at AC-21 at 690 V rated value	32 A
● at AC-21 A at 240 V rated value	32 A
● at AC-21 A at 400 V rated value	32 A

Subject to change without notice
© Copyright Siemens

● at AC-21 A at 440 V rated value	32 A
● at AC-23 A at 400 V rated value	22 A
operating power	
● at AC-23 A at 240 V rated value	6 kW
● at AC-23 A at 400 V rated value	12 kW
● at AC-23 A at 440 V rated value	11.5 kW
● at AC-23 A at 690 V rated value	12 kW
● at AC-3 at 240 V rated value	5.5 kW
● at AC-3 at 400 V rated value	10 kW
● at AC-3 at 690 V rated value	9.5 kW
Auxiliary circuit	
number of CO contacts for auxiliary contacts	0
number of NC contacts for auxiliary contacts	0
number of NO contacts for auxiliary contacts	0
operating voltage of auxiliary contacts at AC maximum	500 V
continuous current of the auxiliary contact rated value	10 A
insulation voltage of the auxiliary switch rated value	500 V
Suitability	
suitability for use main switch	Yes
suitability for use switch disconnector	Yes
suitability for use EMERGENCY OFF switch	No
suitability for use maintenance/repair switch	Yes
Product details	
product feature can be locked into OFF position	Yes
Accessories	
product extension optional	
● motor drive	No
● voltage trigger	No
number of connectable NC contacts for auxiliary contacts attachable maximum	2
number of connectable NO contacts for auxiliary contacts attachable maximum	2
number of connectable CO contacts for auxiliary contacts attachable maximum	0
number of bracket locks maximum	3
hasp thickness of the bracket locks	4 ... 8 mm
Short circuit	
conditional short-circuit current with line-side fuse protection	
● at 690 V by gG fuse rated value	50 kA
let-through current with closed switch	
● at 240 V for combination switch + gG fuse maximum	4.5 kA
● at 440 V for combination switch + gG fuse maximum	4.5 kA
● at 690 V for combination switch + gG fuse maximum permissible	5 kA
I2t value with closed switch	
● at 240 V for combination switch + gG fuse maximum	9 kA²·s
● at 440 V for combination switch + gG fuse maximum	9 kA²·s
● at 690 V for combination switch + gG fuse maximum	9 kA²·s
design of the fuse link	
● for short-circuit protection of the main circuit required	fuse gL/gG: 40 A
● for short-circuit protection of the auxiliary switch required	fuse gL/gG: 10 A
operational current of upstream fuse rated value	40 A
according UL	
operational current at AC according to UL 508/UL 60947-4-1 rated value	32 A
operating voltage at AC at 50/60 Hz according to UL 508/UL 60947-4-1 rated value	600 V
active power [hp] at AC at 480 V according to UL 508/UL	20

Subject to change without notice
© Copyright Siemens

60947-4-1 rated value	
active power [hp] at AC at 600 V according to UL 508/UL 60947-4-1 rated value	20
short-time withstand current (SCCR) at 600 V according to UL 508/UL 60947-4-1	5 kA
continuous current of upstream fuse according to UL rated value	80 A
type of fuse according to UL	RK5
Connections	
AWG number as coded connectable conductor cross section solid maximum	
●	8
●	14
type of connectable conductor cross-sections for copper conductor	
● solid	1x (1,5...16mm²)
● finely stranded with core end processing	1x (1,5...10mm²)
● stranded	1x (1,5...16mm²)
type of connectable conductor cross-sections for auxiliary contacts	
● **solid**	lateral auxiliary switch 2x (0,75 ... 2,5mm²), 1x 4mm²; front auxiliary switch 1x (0,75 ... 2,5mm²)
● **finely stranded with core end processing**	lateral auxiliary switch 2x (0,75 ... 1,5mm²), 1x 2,5mm²; front auxiliary switch 1x 2,5mm²
● **stranded**	lateral auxiliary switch 2x (0,75 ... 2,5mm²), 1x 4mm²; front auxiliary switch 1x (0,75 ... 2,5mm²)
type of electrical connection	
● **for main current circuit**	box terminal
● **for auxiliary contacts**	connection terminals
Mechanical Design	
height	83 mm
width	67 mm
depth	93 mm
type of device	fixed mounting
fastening method	Built-in unit fixed-mounted version
fastening method	
● 4-hole front mounting	Yes
● front mounting with central attachment	No
● rail mounting	No
Net Weight	235 g
Environmental conditions	
ambient temperature during operation	
● minimum	-25 °C
● maximum	55 °C
ambient temperature during storage	
● minimum	-25 °C
● maximum	55 °C

Approvals Certificates

Environment		**General Product Approval**			
Environmental Con-firmations	Environmental Con-firmations	EPD	CCC	cULus	VDE

General Product Approval					**Maritime application**
Miscellaneous	EAC	Confirmation	CE EG-Konf.	UKCA	DNV

Subject to change without notice
© Copyright Siemens

Maritime application	other
LRS PRS	Confirmation 产品合格 QC PASS

Further information

Information on the packaging
https://support.industry.siemens.com/cs/ww/en/view/109813875
Information for data generation and storage
https://support.industry.siemens.com/cs/ww/en/view/109995012
Information- and Downloadcenter (Catalogs, Brochures,…)
https://www.siemens.com/lowvoltage/catalogs
Industry Mall (Online ordering system)
https://mall.industry.siemens.com/mall/en/en/Catalog/product?mlfb=3LD2203-1TL51
Service&Support (Manuals, Certificates, Characteristics, FAQs,...)
https://support.industry.siemens.com/cs/ww/en/ps/3LD2203-1TL51
Image database (product images, 2D dimension drawings, 3D models, device circuit diagrams, ...)
https://www.automation.siemens.com/bilddb/cax_en.aspx?mlfb=3LD2203-1TL51
CAx-Online-Generator
https://www.siemens.com/cax
Tender specifications
https://www.siemens.com/specifications
Kennlinien
https://curves.simaris.siemens.com/curves/3LD2203-1TL51

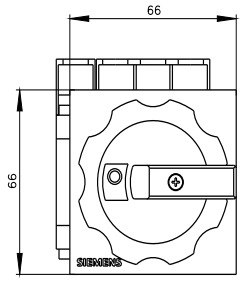

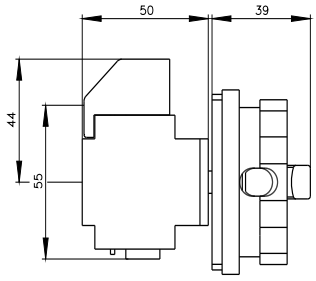

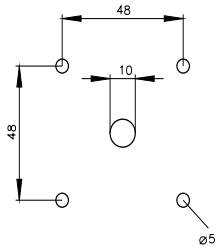

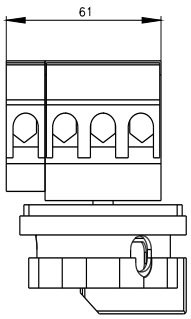

Subject to change without notice
© Copyright Siemens

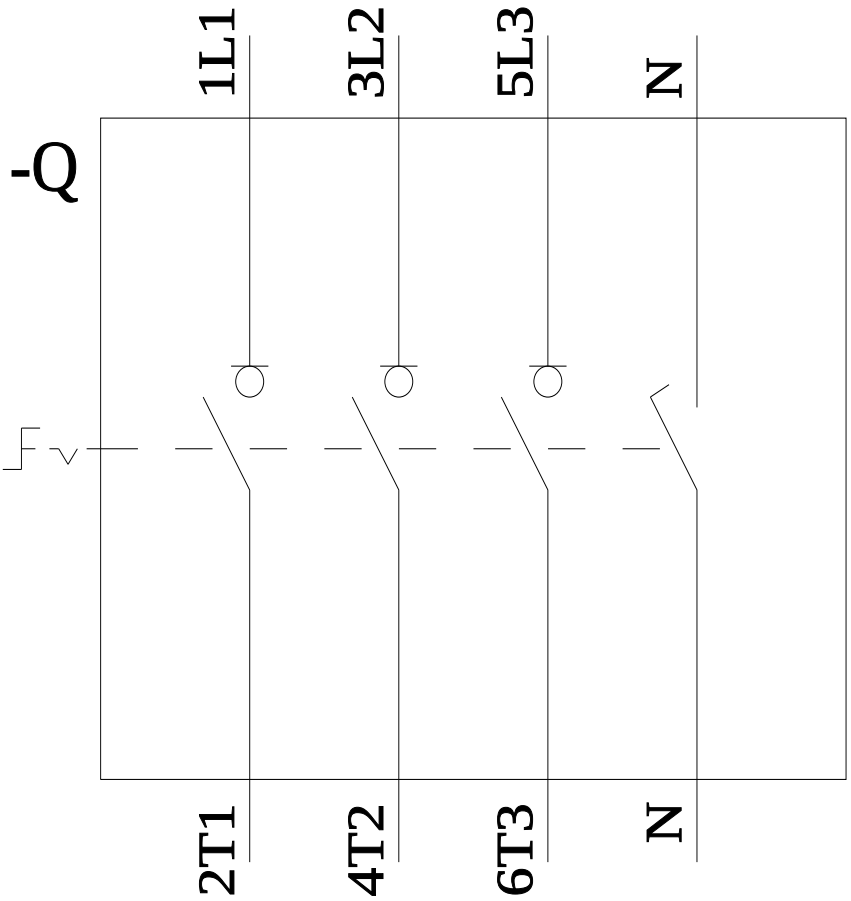

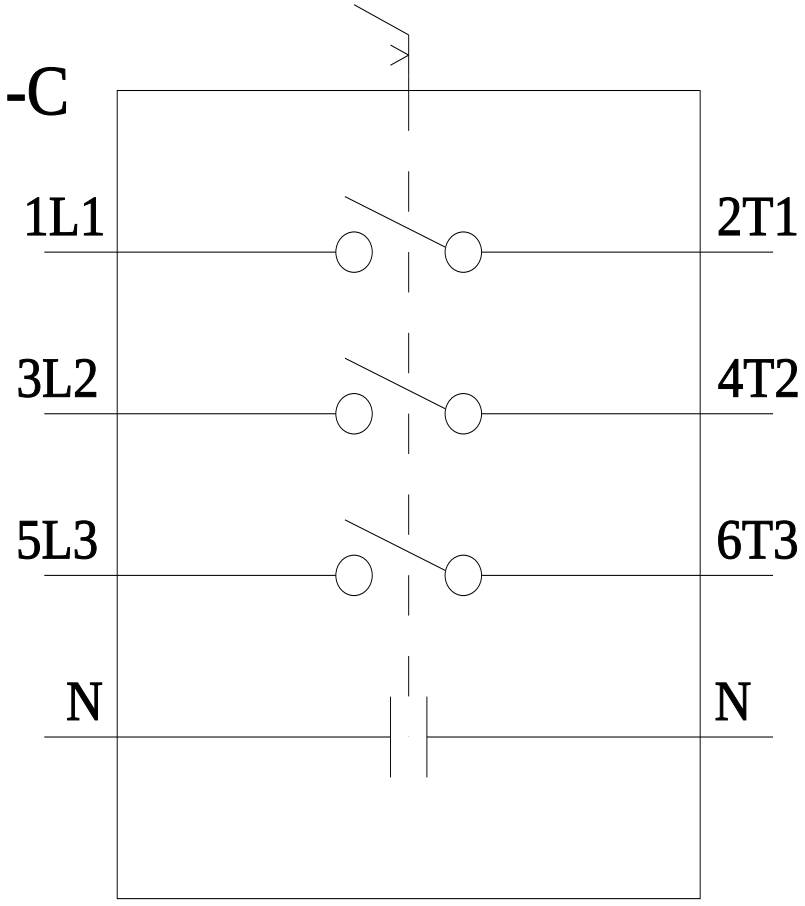

last modified: 7/15/2026

Subject to change without notice
© Copyright Siemens

Subject to change without notice
© Copyright Siemens