Industrial NR1700 series

200mA 42V Input Adjustable Output LDO Regulator

FEATURES

- Operating Temperature Range: -40 °C to 125 °C
- Input Voltage Range (Maximum rating): 3.5 V to 42.0 V (50.0 V)
- Quiescent Current: Typ. 11.5 µA
- Shutdown Current: Typ. 0.1 µA
- Dropout Voltage: Typ. 0.6 V (I_{OUT} = 200 mA, V_{SET} = 5.0 V)
- Adjustable output voltage range: 1.2 V to 24.0 V
- Feedback Voltage: 1.2 V
- Feedback Voltage Accuracy: -0.5% to +0.7% (T_a = 25 °C)
- Output Current: 200 mA
- Protection Function: Thermal Shutdown, Over Current Protection(Fold-back),Short Circuit Current Limit

GENERAL DESCRIPTION

The NR1700 series is a CMOS-based 42 V, 200 mA low dropout regulator.
This device provides outstanding high feedback voltage accuracy as -0.5% to+0.7% and covers adjustable output voltage range from 1.2 V to 24 V with a voltage divider resistor.
In addition, this device corresponds to wide capacitance value range of output ceramic capacitor from 0.1 µF to 100 µF to secure stable operation.
This product is a highly reliable product that has been tested at high temperatures and for reliability more stringent than consumer products.

Application

- Household electrical products such as refrigerators, rice cookers, electric kettles, etc.
- Notebook PCs, digital TVs, telephones, home LAN systems, etc.
- Industrial equipment such as FA equipment, smart meters, OA equipment, etc.
- Equipment used outdoors or in high temperature environments

Packages (unit: mm)

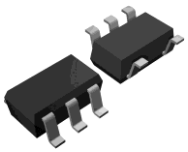

SOT-23-5-DC
2.9 x 2.8 x 1.1

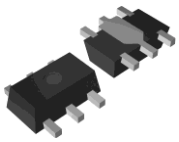

SOT-89-5-DM
4.5 x 4.35 x 1.5

DFN(PL)2018-6-GZ
1.8 x 2.0 x 0.6

Application example

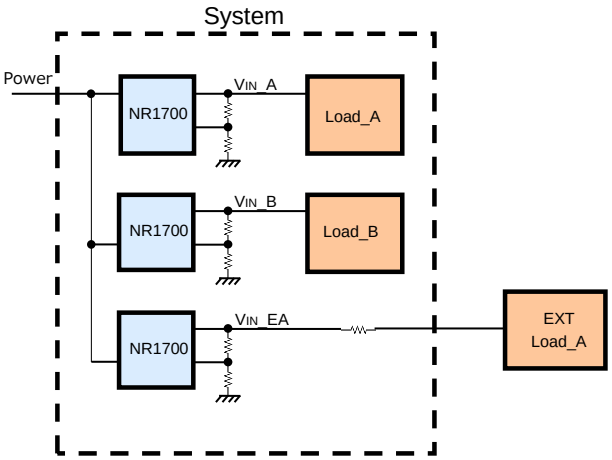

Because of an adjustable output voltage type, this device covers various voltage power rails, and can also compensate for voltage drop caused by longer wiring.

■ PRODUCT NAME INFORMATION

NR1700 aa bbb c dd e

Description of configuration

composition	Item	Description
aa	Package Code	Indicates the package. DC: SOT-23-5-DC DM: SOT-89-5-DM GZ: DFN(PL)2018-6-GZ
bbb	Output Voltage	Only "000"
c	Version	Only "A"
dd	Packing	Insert Direction. Refer to the packing specifications.
e	Grade	Indicating the quality grade. D: Industrial Equipment

Grade

e	Applications	Operating Temperature Range	Test Temperature
D	Industrial Equipment and Social Infrastructures	−40°C to 125°C	25°C, 125°C

■ ORDER INFORMATION

PRODUCT NAME	PACKAGE	RoHS	HALOGEN-FREE	Plating Composition	WEIGHT (mg)	Quantity per Reel (pcs)
NR1700DC000AE1D	SOT-23-5-DC	✓	✓	Sn	14	3000
NR1700DM000AE1D	SOT-89-5-DM	✓	✓	Sn	55	1000
NR1700GZ000AE4D	DFN(PL)2018-6-GZ	✓	✓	Au	5	5000

■ PIN DESCRIPTIONS (NR1700DC)

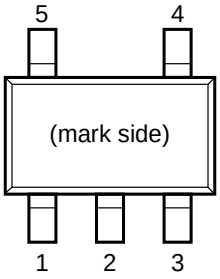

SOT-23-5-DC Pin Configuration

Pin No.	Pin Name	I/O	Description
1	VIN	Power	Power Supply Input Pin Connect the input capacitor (C_{IN}) between the VIN pin and GND.
2	GND	-	Ground Pin
3	EN	I	Enable Pin (Active-High) Input "Low" to this pin shuts down the IC. Input "High" to this pin enables the IC. This pin is internally pulled-down with constant current.
4	FB	I	Feedback Input Pin Connect external resistors to set output voltage
5	VOUT	O	Output Pin Connect the output capacitor (C_{OUT}) between VOUT pin and GND.

Please refer to "*TYPICAL APPLICATION CIRCUIT*" or "*THEORY OF OPERATION*" for details.

■ PIN DESCRIPTIONS (NR1700DM)

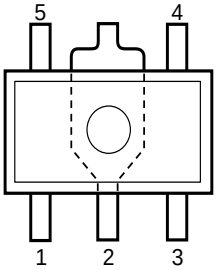

SOT-89-5-DM Pin Configuration

Pin No.	Pin Name	I/O	Description
1	EN	I	Enable Pin (Active-high) Input "Low" to this pin shuts down the IC. Input "High" to this pin enables the IC. This pin is internally pulled-down with constant current.
2	GND	-	Ground Pin
3	VIN	Power	Power Supply Input Pin Connect the input capacitor (C_{IN}) between the VIN pin and GND.
4	VOUT	O	Output Pin Connect the output capacitor (C_{OUT}) between VOUT pin and GND.
5	FB	I	Feedback Input Pin Connect the external resistors to set output voltage

Please refer to "*TYPICAL APPLICATION CIRCUIT*" or "*THEORY OF OPERATION*" for details.

■ PIN DESCRIPTIONS (NR1700GZ)

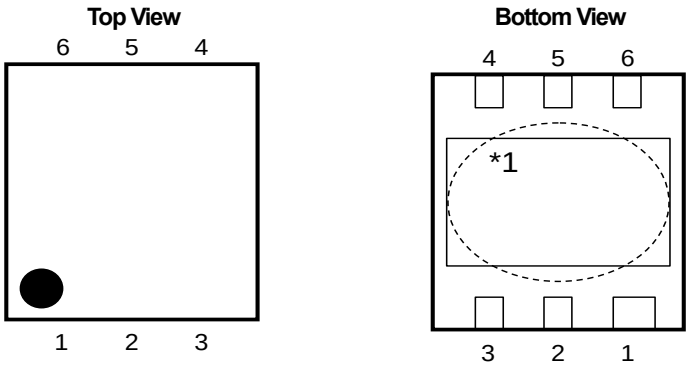

DFN(PL)2018-6-GZ Pin Configuration

Pin No.	Pin Name	I/O	Description
1	VOUT	O	Output Pin Connect the output capacitor (C_{OUT}) between VOUT pin and GND.
2	NC	-	No Connection This pin is electrically open. It is recommended to connect it to the board when mounting to strengthen mounting strength.
3	FB	I	Feedback Input Pin Connect the external resistors to set output voltage
4	EN	I	Enable Pin (Active-high) Input "Low" to this pin shuts down the IC. Input "High" to this pin enables the IC. This pin is internally pulled-down with constant current.
5	GND	-	Ground Pin
6	VIN	Power	Power Supply Input Pin Connect the input capacitor (C_{IN}) between the VIN pin and GND.

*1 The potential of the tab on the backside of the package is the substrate potential.
It is recommended to connect it to the GND.

Please refer to "*TYPICAL APPLICATION CIRCUIT*" or "*THEORY OF OPERATION*" for details.

■ ABSOLUTE MAXIMUM RATINGS

	Symbol	Ratings	Unit
Input Voltage	V_{IN}	−0.3 to 50	V
Input Peak Voltage *1	V_{IN}	60	V
EN pin input Voltage	V_{EN}	−0.3 to 50	V
EN pin Peak Voltage *1	V_{EN}	60	V
Output Voltage	V_{OUT}	−0.3 to V_{IN} + 0.3 ≤ 50	V
FB pin Voltage	V_{FB}	−0.3 to 7	V
Junction Temperature Range*2	T_j	−40 to 150	°C
Storage Temperature Range	T_{stg}	−55 to 150	°C

ABSOLUTE MAXIMUM RATINGS
Electronic and mechanical stress momentarily exceeded absolute maximum ratings may cause permanent damage and may degrade the lifetime and safety for both device and system using the device in the field. The functional operation at or over these absolute maximum ratings is not assured.

*1 Duration time: within 200 ms

*2 Calculate the power consumption of the IC from the operating conditions and calculate the junction temperature with the thermal resistance. Please refer to "THERMAL CHARACTERISTICS" below for thermal resistance under our measured substrate conditions.

■ THERMAL CHARACTERISTICS

Package	Parameter	Measurement Result	Unit
SOT-23-5-DC	Thermal Resistance (θja)	150	°C /W
	Thermal Characterization Parameter (ψjt)	51	
SOT-89-5-DM	Thermal Resistance (θja)	38	
	Thermal Characterization Parameter (ψjt)	13	
DFN(PL)2018-6-GZ	Thermal Resistance (θja)	50	
	Thermal Characterization Parameter (ψjt)	23	

θja: Junction-to-Ambient Thermal Resistance
ψjt: Junction-to-Top Thermal Characterization Parameter

For more information, click *here.*

■ ELECTROSTATIC DISCHARGE RATINGS

	Conditions	Protection Voltage
HBM	C = 100 pF, R = 1.5 kΩ	±2000 V
CDM		±1000 V

ELECTROSTATIC DISCHARGE RATINGS

The electrostatic discharge test is done based on JESD47.
In the HBM method, ESD is applied using the power supply pin and GND pin as reference pins.

■ RECOMMENDED OPERATING CONDITIONS

Parameter	Symbol	Ratings	Unit
Input Voltage	V_{IN}	3.5 to 42	V
EN Pin Input Voltage	V_{EN}	0 to 42	V
Set Output Voltage	V_{SET}	1.2 to 24	V
Output Current	I_{OUT}	0 to 200	mA
Operating Temperature Range	T_a	−40 to 125	°C

RECOMMENDED OPERATING CONDITIONS

All electronic equipment should be designed that the mounted semiconductor devices operate within the recommended operating conditions. The semiconductor devices cannot operate normally over the recommended operating conditions, even if they are used over such conditions by momentary electronic noise or surge. And the semiconductor devices may receive serious damage when they continue to operate over the recommended operating conditions.

■ ELECTRICAL CHARACTERISTICS

Short-circuit VOUT pin and FB pin (V_{SET} = 1.2V) unless otherwise specified.
V_{IN} = 14 V, I_{OUT} = 1 mA, C_{IN} = 0.1 µF, C_{OUT} = 0.1 µF
For items without temperature conditions, TYP values are at T_a = 25°C and MIN/MAX values are applied to all the temperature range of −40°C ≤ T_a ≤ 125 °C.

NR1700xx000AExD

Parameter	Symbol	Conditions		MIN	TYP	MAX	Unit
FB Voltage	V_{FB}	V_{IN} = 14 V		-	1.2	-	V
FB Voltage Accuracy		T_a = 25 °C	V_{IN} = 14 V	-0.50	-	+0.70	%
		-40 °C ≤ T_a ≤ 125 °C	V_{IN} = 14 V	-1.70	-	+1.00	%
			V_{IN} = 3.5 V to 36 V	-3.67	-	+3.67	%
FB pin current	I_{FB}	V_{FB} = 1.2 V		-	0.1	0.4	µA
Quiescent Current *1	I_Q	V_{IN} = V_{EN} =14 V I_{OUT} = 0 mA		-	11.5	21	µA
Shutdown Current	I_{SD}	V_{IN} = 42 V, V_{EN} = 0 V		-	0.1	0.9	µA
Dropout Voltage *2*3	V_{DO}	I_{OUT} = 200 mA	V_{SET} = 1.2 V	-	-	3.0	V
			V_{SET} = 24 V	-	0.5	1.0	V
Load Regulation *4	$\Delta V_{OUT}/\Delta I_{OUT}$	V_{IN} = V_{SET} + 4 V, I_{OUT} = 1 mA to 200 mA	V_{SET} = 1.2 V	-0.4	-	2.6	%
			V_{SET} = 24 V	-1.4	-	1.0	%
Line Regulation	$\Delta V_{OUT}/\Delta V_{IN}$	V_{IN} = 3.5 V to 42 V		-0.128	-	0.128	%/V
Ripple Rejection	RR	V_{IN} = V_{SET} + 3 V, Ripple 0.2 Vp-p, I_{OUT} = 50 mA, f = 100 Hz		-	55	-	dB
Output Current Limit	I_{LIM}	V_{IN} = V_{SET} + 4 V, V_{OUT} = V_{SET} × 0.90		200	350	-	mA
Short-circuit Current	I_{SC}	V_{IN} = 3.5 V, V_{OUT} = 0 V		50	85	145	mA
EN pin High Input Voltage (enable device)	V_{ENH}			1.62	-	42	V
EN pin Low Input Voltage (disable device)	V_{ENL}			0	-	1.0	V
EN pin current	I_{EN}	V_{IN} = 42 V, V_{EN} = 2 V		-	0.3	0.6	µA
Thermal shutdown detection temperature	T_{SDDET}	T_j = Rising		-	165	-	°C
Thermal shutdown release temperature	T_{SDREL}	T_j = Falling		-	140	-	°C

All test parameters listed in Electrical Characteristics are tested under the condition of T_j ≈ T_a = 25°C/ 125°C expect for Ripple Rejection.

*1 It is the VIN pin current and is not included the current flowing through external resistors.

*2 Input Voltage (V_{IN}) should be above 3.5V, and V_{SET} + Dropout Voltage or higher.

*3 Dropout Voltage is specified as the minimum voltage difference between Input Voltage (V_{IN}) and Output Voltage (V_{OUT}) required to obtain 95% of V_{SET} at specified load current.

*4 Load Regulation is the value calculated with V_{OUT}(@I_{OUT} = 1 mA) – V_{OUT}(@I_{OUT} = 200 mA).

*5 Dropout voltage, load regulation, and output current limit are fully tested only at Tj ≈ Ta = 25 °C.

■ TYPICAL APPLICATION CIRCUIT

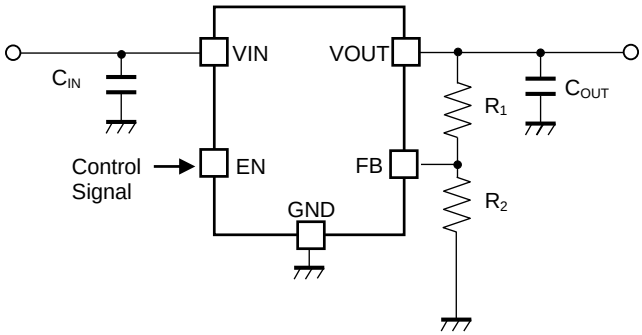

NR1700 TYPICAL APPLICATION CIRCUIT

● EXTERNAL COMPONENTS INFORMATION

Input Capacitor (C_{IN})

Connect an input capacitor (C_{IN}) of 0.1 µF or more between the VIN pin and the GND pin at the shortest distance.
It is recommended to use ceramic capacitors of X7R having small temperature dependence to ESR, ESL, and capacitance. Ceramic capacitors as X7S or X5R could be used depending on the application condition such as temperature condition.

Output Capacitor (C_{OUT})

Phase compensation is provided to secure stable operation even when the load current is varied.
Connect a suitable output capacitor (C_{OUT}) between the VOUT pin and the GND pin at the shortest distance.
It is recommended to use ceramic capacitors of X7R having small temperature dependence to ESR, ESL, and capacitance. Ceramic capacitors as X7S or X5R could be used depending on the application condition such as temperature condition.
Besides, set for the output capacitor to ensure the following effective capacitance in consideration of the dependence of temperature, DC bias, and package size.

Set Output Voltage vs. Effective Capacitance

Set Output Voltage (V_{SET})	Effective Capacitance
1.2 V ≤ V_{SET} < 5 V	0.07 µF ≤ C_{OUT} ≤ 100 µF
5 V ≤ V_{SET} ≤ 12 V	0.05 µF ≤ C_{OUT} ≤ 100 µF
12 V < V_{SET} ≤ 24 V	0.03 µF ≤ C_{OUT} ≤ 100 µF

When use capacitors except for ceramic capacitor, choose output capacitors to ensure the above effective capacitance, and ESR (Equivalent Series Resistance) is 100 ohm or lower.

● External Resistors for Adjustable Output Voltage

The NR1700 can be adjusted the output voltage (V_{SET}) from 1.2 V to 24 V with a voltage divider resistor (R_1, R_2) that is connected to the FB pin as following diagram. Use the formula shown below to calculate output voltage.

$V_{SET} = V_{FB} \times (R_1 + R_2) / R_2 + V_{FB} \times R_1 / R_{IC}$ $V_{FB} = 1.2$ V (Typ.) $R_{IC} = 12.5$ MΩ (Typ.)

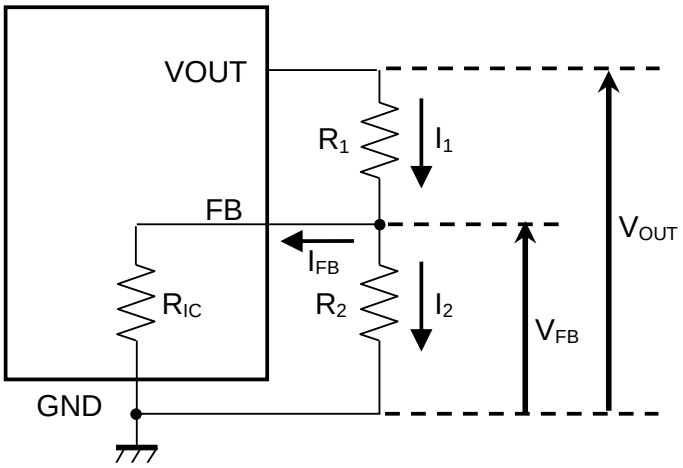

Adjustable Output Voltage R1, R2 connection diagram

Choose a voltage divider resistor (R_1, R_2) to refer the below table.

Adjustable Output Voltage vs. R_1/ R_2

Set Output Voltage (V_{SET})	R_1	R_2
V_{SET} = 1.2 V	0 (connect the VOUT pin and the FB pin)	*1
1.2 V < V_{SET} ≤ 24 V	$R_2 \times R_{IC} / (R_2 + R_{IC}) \times (V_{SET} / V_{FB} - 1)$	≤ 51 kΩ

Choose a suitable R_2, then calculate R_1 to refer the above formula.
An error of the output voltage (V_{OUT}) due to the internal resistance (R_{IC}) between FB pin and GND pin is calculated by $V_{FB} \times R_1 / R_{IC}$. If $R_1 << R_{IC}$ is true, the error can be reduced, however small R_1 value determines a small R_2 value, and invalid current $I_2 = V_{FB} / R_2$ increases. Choose R_2 value consider balance between an error due to R_{IC} and invalid current as well.

*1 If the load current from NR1700 is below 24 μA , use R_2 ≤ 51 kΩ to prevent rising the output voltage due to leak current.

■ BLOCK DIAGRAM

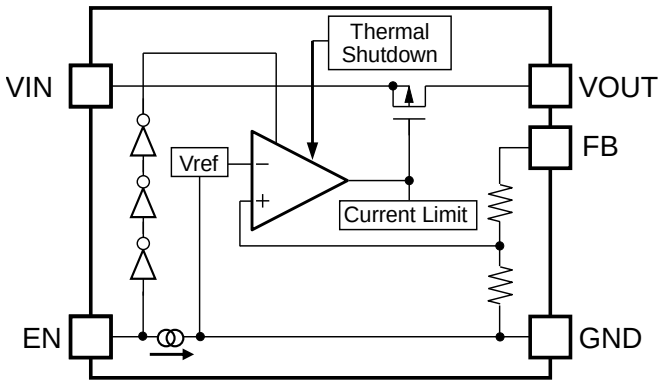

NR1700 Block Diagram

■ THEORY OF OPERATION

● Enable Function

Forcing above designated "High" voltage to EN pin, the NR1700 becomes active. Forcing below designated "Low" voltage to EN pin shuts down the NR1700.
The EN pin is internally pull-down with Typ. 0.3 µA as constant current. When the EN pin is OPEN, the NR1700 is in shutdown state.
If control by the EN pin is not possible or is not required, connect the EN pin to the VIN pin, etc., so that "High" is input to EN pin.
Even if voltage is applied to the EN pin before the VIN pin, the IC will not fail.

● Thermal Shutdown

When the junction temperature exceeds the thermal shutdown detection temperature (Typ.165 °C), this IC cuts off the output transistor and suppresses the self-heating. When the junction temperature falls below the thermal shutdown release temperature (Typ. 140 °C), this IC will restart.

■ Cautions for use

● Behavior under minimum operating voltage or lower.

If Output Voltage (V_{OUT}) is 2.8V or lower and Input Voltage (V_{IN}) is below the recommended operating voltage (Min. 3.5V), the output voltage may exceed the set output voltage. In order to prevent such behavior, control as follows.

- When start-up, either to raise Input Voltage (V_{IN}) at a slew rate of 35 V/ms or faster, or to turn the EN pin from "Low" to "High" after Input Voltage (VI_N) exceeds 3.5V.
- When shutdown, either to be dropped Input Voltage (V_{IN}) at a slew rate of -35 V/ms or faster, or to turn the EN pin from "High" to "Low" before Input Voltage (V_{IN}) drops below 3.5V.

■ THERMAL CHARACTERISTICS (SOT-23-5-DC)

Thermal characteristics depend on mounting conditions. The thermal characteristics below are the results of measurements under measurement conditions determined by our company with reference to JEDEC STD. (JESD51).

Measurement Result

Item	Measurement Result
Thermal Resistance (θja)	150 °C/W
Thermal Characterization Parameter (ψjt)	51 °C/W

θja : Junction-to-Ambient Thermal Resistance

ψjt : Junction-to-Top Thermal Characterization Parameter

Measurement Conditions

Item		Specification
Measurement Condition		Mounting on Board (Still Air)
Board material		FR-4
Board size		76.2 mm × 114.3 mm × t 0.8 mm
Copper foil layer	1	50 mm × 50 mm (coverage rate 95%), t 0.040 mm
	2	50 mm × 50 mm (coverage rate 100%), t 0.035 mm
	3	50 mm × 50 mm (coverage rate 100%), t 0.035 mm
	4	50 mm × 50 mm (coverage rate 100%), t 0.040 mm
Thermal vias		ϕ 0.3 mm × 7 pcs

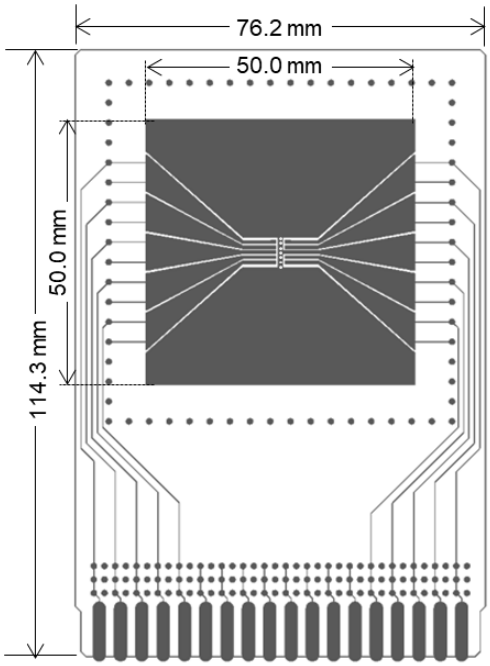

Measurement Board Pattern

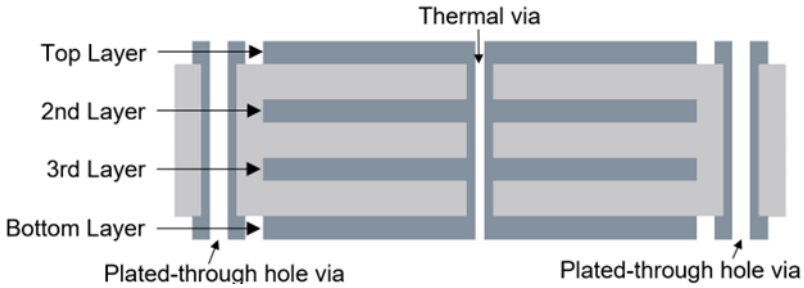

Cross section view of layers and vias

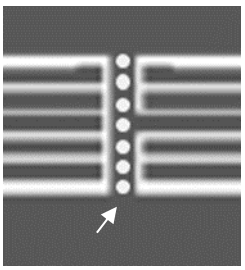

Enlarged view of IC mounting area

● CALCULATION METHOD OF JUNCTION TEMPERATURE

The junction temperature (Tj) can be calculated from the following formula.

$$Tj = Ta + \theta ja \times P$$
$$Tj = Tc\,(top) + \psi jt \times P$$

Where:
- Ta : Ambient temperature
- Tc (top) : Package mark side center temperature
- $P = (V_{IN} - V_{OUT}) \times I_{OUT}$: Power consumption under user's conditions

■ THERMAL CHARACTERISTICS (SOT-89-5-DM)

Thermal characteristics depend on mounting conditions. The thermal characteristics below are the results of measurements under conditions determined by our company with reference to JEDEC STD. (JESD51).

Measurement Result

Item	Measurement Result
Thermal Resistance (θja)	38 °C/W
Thermal Characterization Parameter (ψjt)	13 °C/W

θja : Junction-to-Ambient Thermal Resistance

ψjt : Junction-to-Top Thermal Characterization Parameter

Measurement Conditions

Item		Specification
Measurement Condition		Mounting on Board (Still Air)
Board material		FR-4
Board size		76.2 mm × 114.3 mm × t 0.8 mm
Copper foil layer	1	50 mm × 50 mm (coverage rate 95%), t 0.040 mm
	2	50 mm × 50 mm (coverage rate 100%), t 0.035 mm
	3	50 mm × 50 mm (coverage rate 100%), t 0.035 mm
	4	50 mm × 50 mm (coverage rate 100%), t 0.040 mm
Thermal vias		ϕ 0.3 mm × 13 pcs

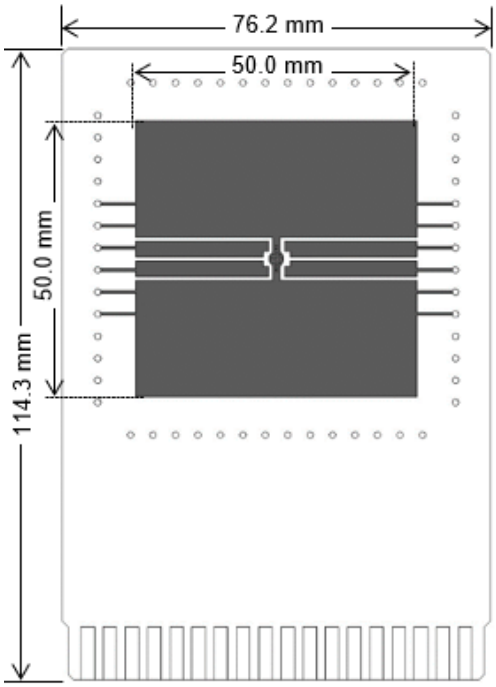

Measurement Board Pattern

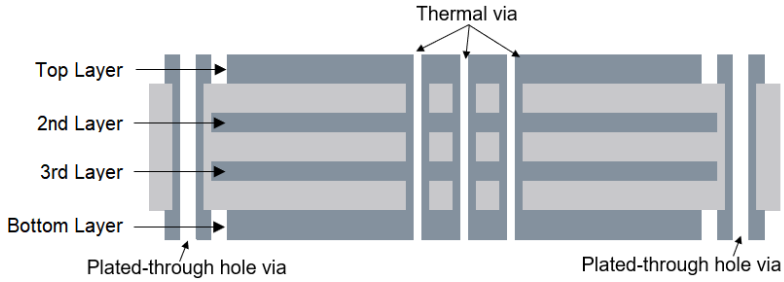

Cross section view of layers and vias

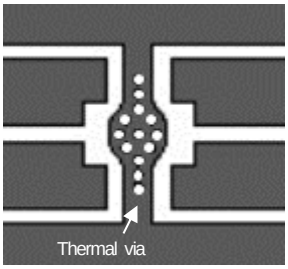

Enlarged view of IC mounting area

● CALCULATION METHOD OF JUNCTION TEMPERATURE

The junction temperature (Tj) can be calculated from the following formula.

$$Tj = Ta + \theta ja \times P$$
$$Tj = Tc\,(top) + \psi jt \times P$$

Where:
- Ta : Ambient temperature
- Tc (top) : Package mark side center temperature
- P = (VIN – VOUT) x IOUT : Power consumption under user's conditions

■ THERMAL CHARACTERISTICS (DFN(PL)2018-6-GZ)

Thermal characteristics depend on mounting conditions. The thermal characteristics below are the results of measurements under conditions determined by our company with reference to JEDEC STD. (JESD51).

Measurement Result

Item	Measurement Result
Thermal Resistance (θja)	50 °C/W
Thermal Characterization Parameter (ψjt)	23 °C/W

θja : Junction-to-Ambient Thermal Resistance

ψjt : Junction-to-Top Thermal Characterization Parameter

Measurement Conditions

Item		Specification
Measurement Condition		Mounting on Board (Still Air)
Board material		FR-4
Board size		76.2 mm × 114.3 mm × t 1.6 mm
Copper foil layer	1	50 mm × 50 mm (coverage rate 95%), t 0.070 mm
	2	74.2 mm × 74.2 mm (coverage rate 100%), t 0.035 mm
	3	74.2 mm × 74.2 mm (coverage rate 100%), t 0.035 mm
	4	50 mm × 50 mm (coverage rate 95%), t 0.070 mm
Thermal vias		ϕ 0.3 mm × 6 pcs

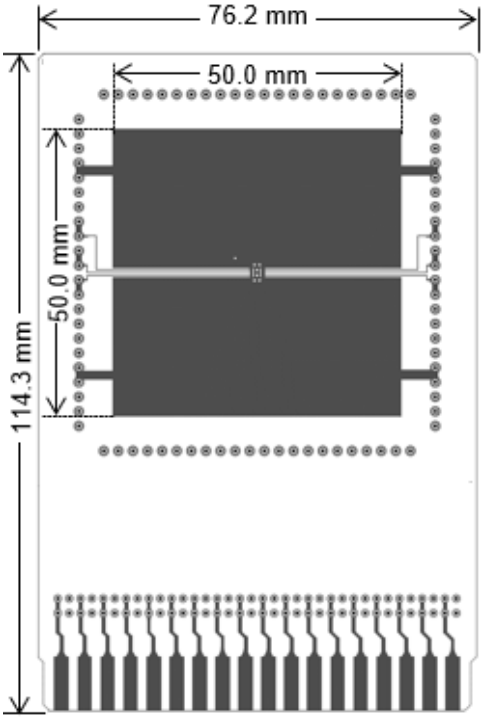

Measurement Board Pattern

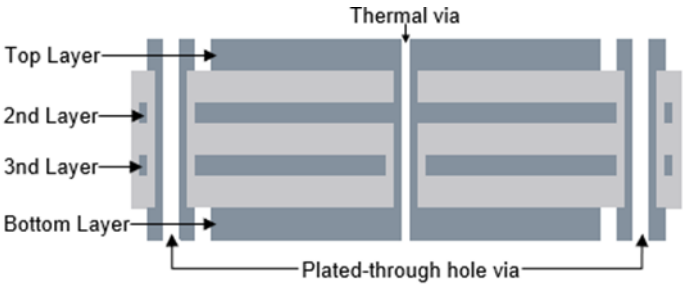

Cross section view of layers and vias

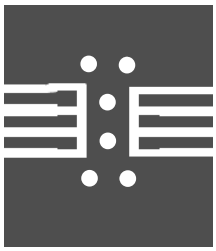

Enlarged view of IC mounting area

● CALCULATION METHOD OF JUNCTION TEMPERATURE

The junction temperature (Tj) can be calculated from the following formula.

$$Tj = Ta + \theta ja \times P$$
$$Tj = Tc\,(top) + \psi jt \times P$$

Where:
- Ta : Ambient temperature
- Tc (top) : Package mark side center temperature
- P = (VIN – VOUT) x IOUT : Power consumption under user's conditions

■ **NR1700DC MARKING SPECIFICATION**

①②③: Product Code (Abbreviation)

④⑤: Lot Number ••• Alphanumeric Serial Number.

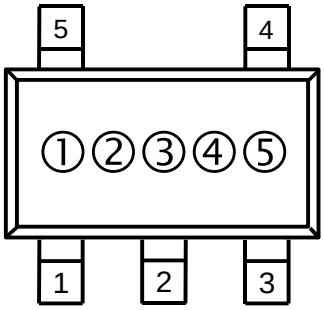

SOT-23-5-DC Marking

Marking List

Product Code	①②③
NR1700DC000A	1AA

NOTICE
There can be variation in the marking when different AOI (Automated Optical Inspection) equipment is used. In the case of recognizing the marking characteristic with AOI, please contact our sales or distributor before attempting to use AOI.

■ **NR1700DM MARKING SPECIFICATION**

①②③④: Product Code (Abbreviation)

⑤⑥: Lot Number ••• Alphanumeric Serial Number.

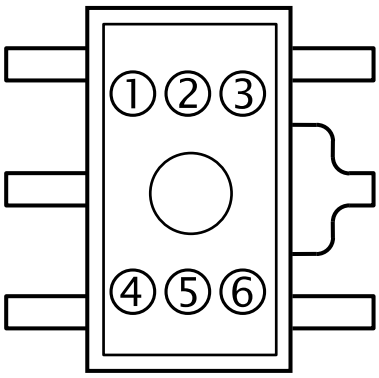

SOT-89-5-DM Marking

Marking List

Product Code	①②③④
NR1700DM000A	109A

NOTICE
There can be variation in the marking when different AOI (Automated Optical Inspection) equipment is used. In the case of recognizing the marking characteristic with AOI, please contact our sales or distributor before attempting to use AOI.

■ **NR1700GZ MARKING SPECIFICATION**

①②③④: Product Code (Abbreviation)

⑤⑥: Lot Number ･･･ Alphanumeric Serial Number.

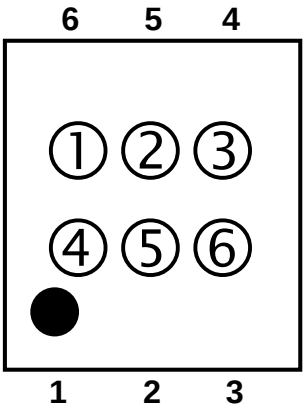

DFN(PL)2/4/2026-6-GZ Marking

Marking List

Product Code	①②③④
NR1700GZ000A	Z017

NOTICE
There can be variation in the marking when different AOI (Automated Optical Inspection) equipment is used. In the case of recognizing the marking characteristic with AOI, please contact our sales or distributor before attempting to use AOI.

■ Application Note

● Internal Equivalent Circuit Diagram of Pin

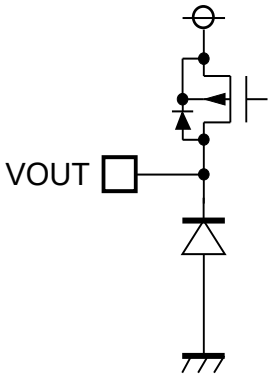

VOUT pin

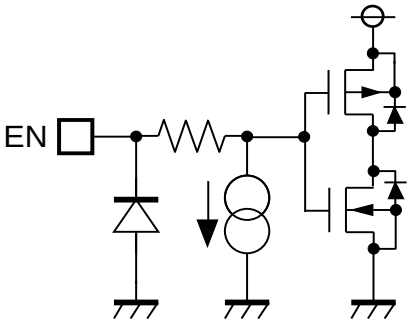

EN pin

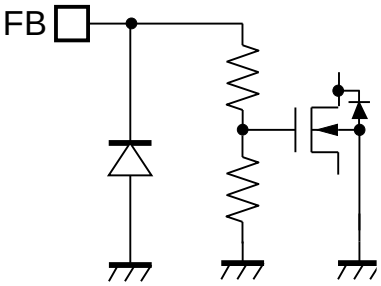

FB pin

● Evaluation Board / PCB Layout Pattern Example

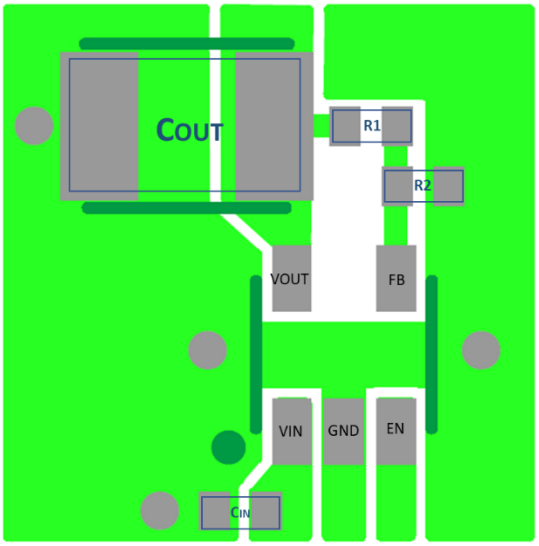

NR1700DC

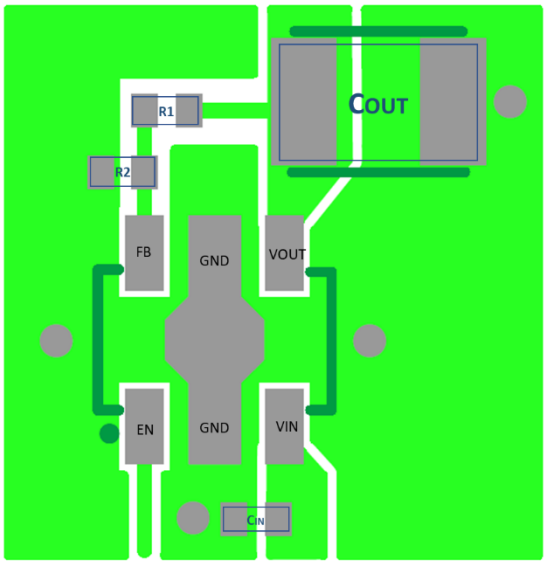

NR1700DM

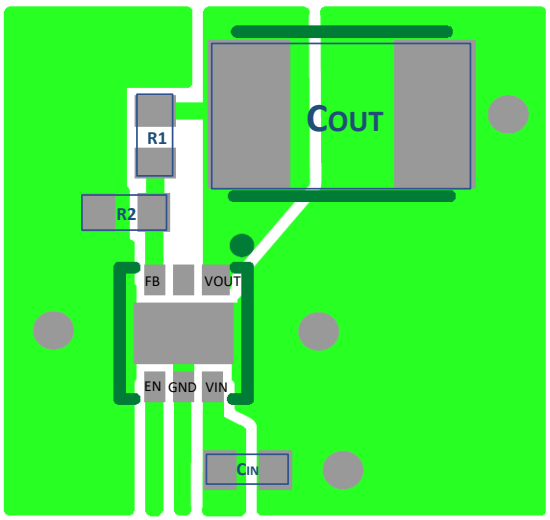

NR1700GZ

■ TYPICAL CHARACTERISTICS

Note: Typical Characteristics are intended to be used as reference data; they are not guaranteed.
Ta = 25 °C, C_{IN} = 1 µF, C_{BIAS} = 1 µF, C_{OUT} = 10 µF unless otherwise noted.

1) Output Voltage vs Output Current (Current Limit)

V_{SET} = 1.2 V

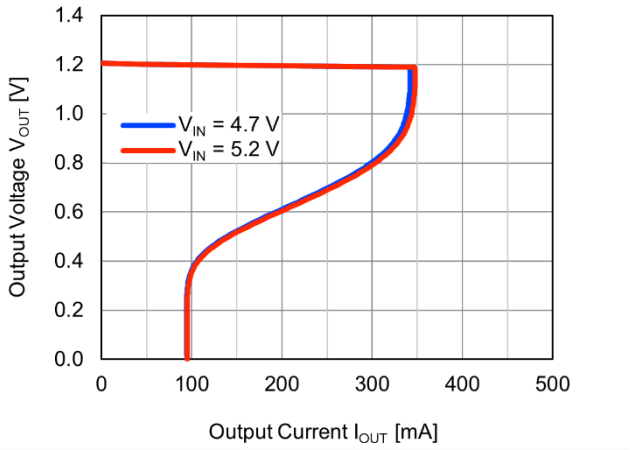

V_{SET} = 5 V

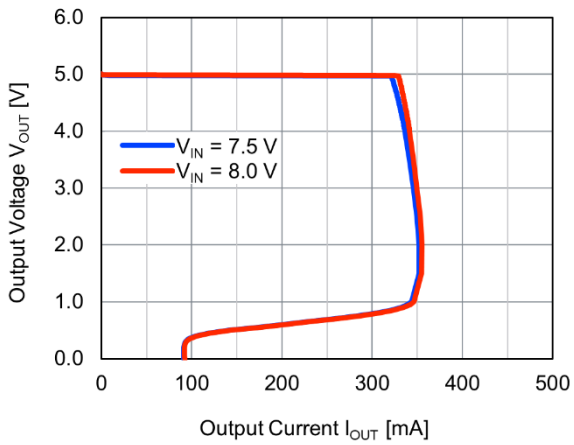

V_{SET} = 12 V

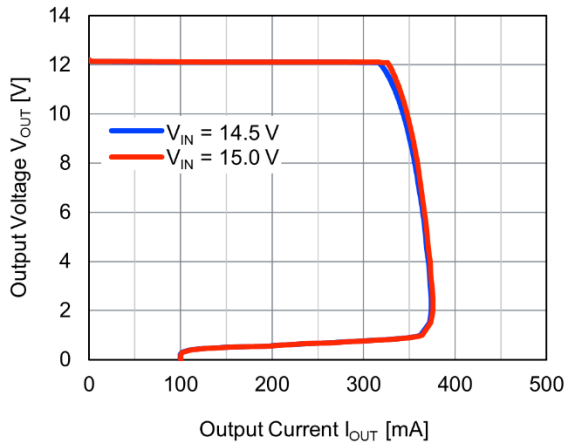

V_{SET} = 24 V

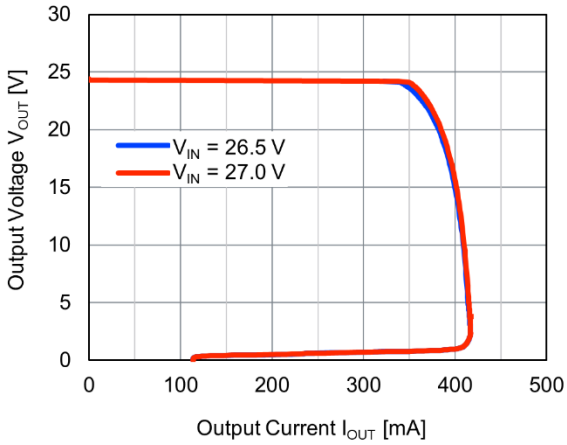

2) Output Voltage vs Input Voltage

V_{SET} = 1.2 V

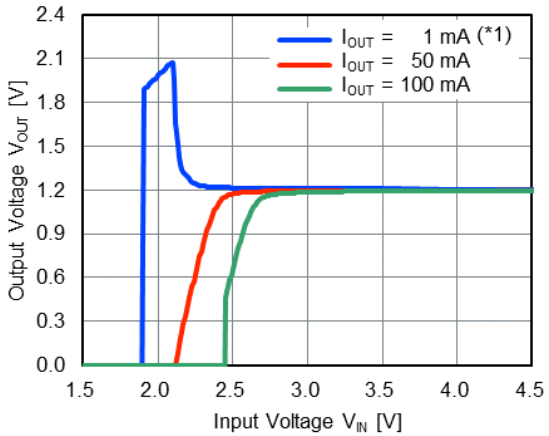

V_{SET} = 5 V

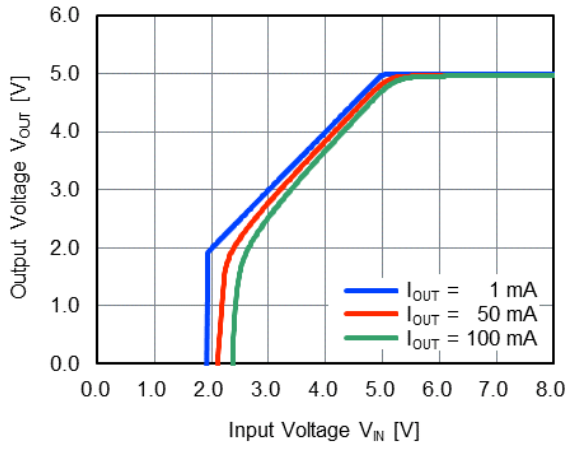

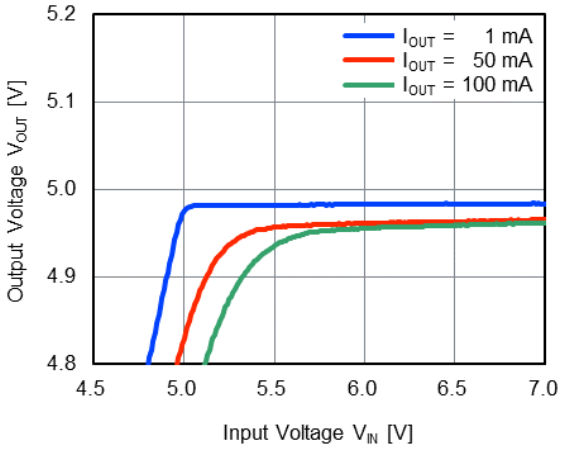

V_{SET} = 12 V

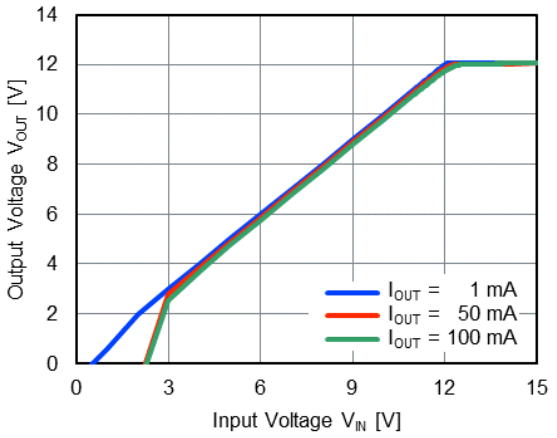

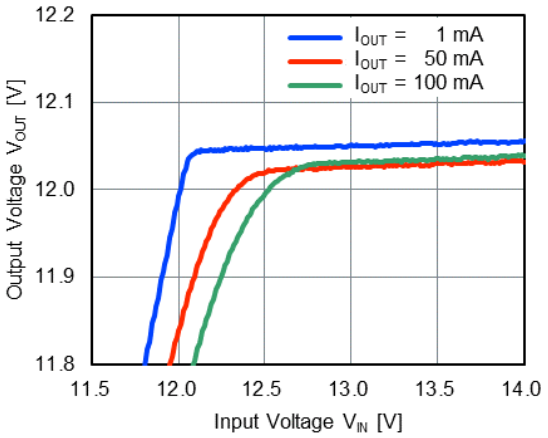

V_{SET} = 24 V

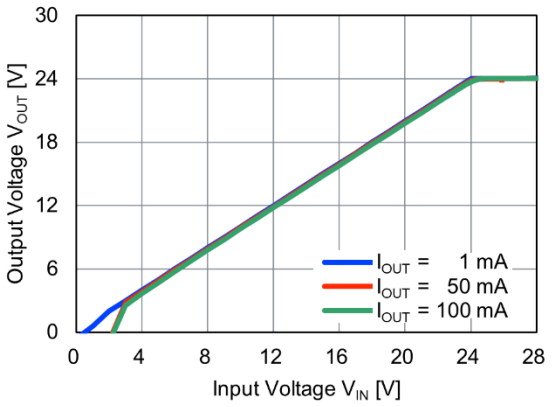

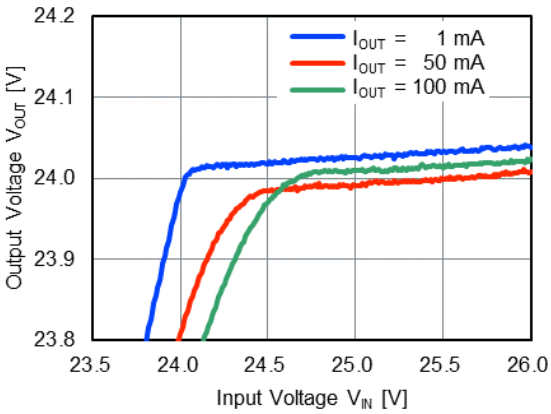

*1 Though there is a condition of $V_{OUT} > V_{SET}$ when $V_{IN} < 3.5V$, regulation is not guaranteed due to below the recommended operating condition. For more information, see "Cautions for Use".

3) Output Voltage vs Temperature

V_{IN} = 14 V (V_{SET} < 24 V) or V_{IN} = 26 V (V_{SET} = 24V), I_{OUT} = 1 mA

V_{SET} = 1.2 V

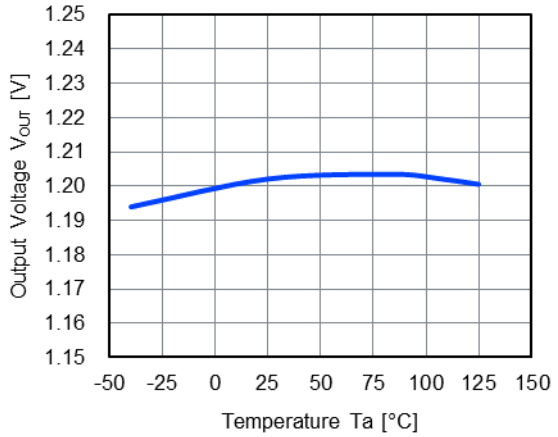

V_{SET} = 5.0 V

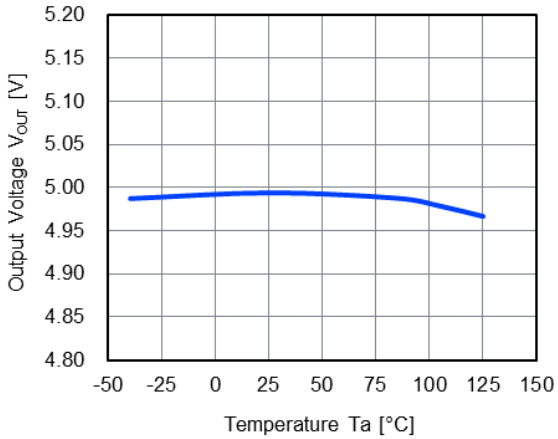

V_{SET} = 12 V

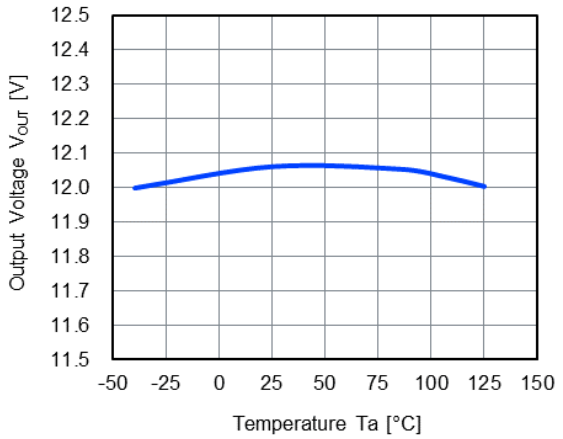

V_{SET} = 24 V

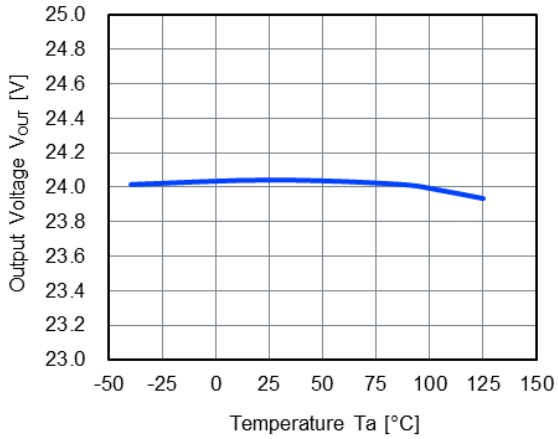

4) Quiescent Current*2 vs Temperature

C_{IN} = none, V_{IN} = 14 V, I_{OUT} = 0 mA

V_{SET} = 1.2 V

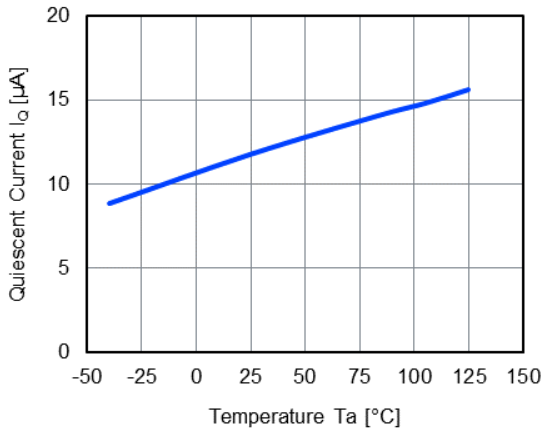

*2 Not include current flow into external resistors.

5) Quiescent Current*3 vs Input Voltage

C_{IN} = none, I_{OUT} = 0 mA
V_{SET} = 1.2 V

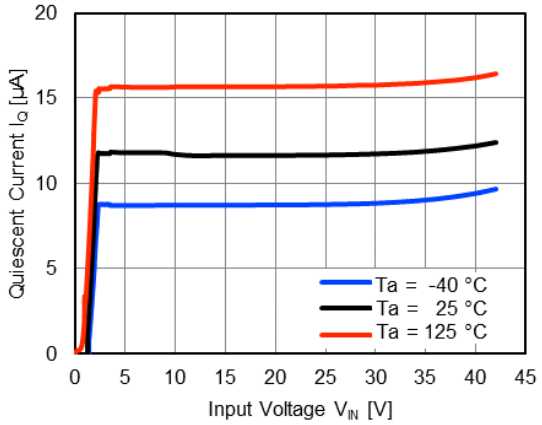

*3 Not include current flow into external resistors.

6) FB pin Current vs Temperature

V_{IN} = 14 V, V_{EN} = 0 V, V_{FB} = 1.2 V, V_{OUT} = 0 V
V_{SET} = 1.2 V

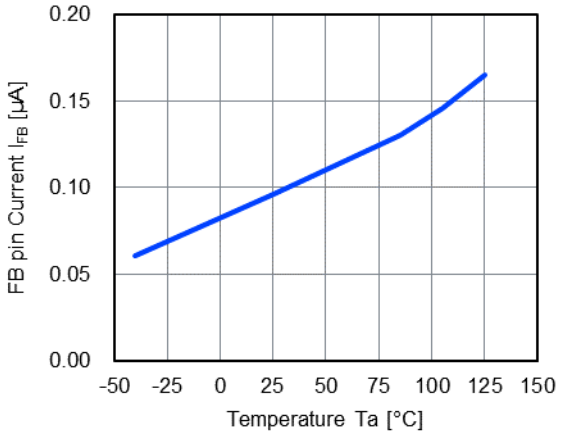

7) EN pin input "High / Low" Voltages vs Temperature

V_{IN} = 3.5 V
V_{SET} = 1.2 V

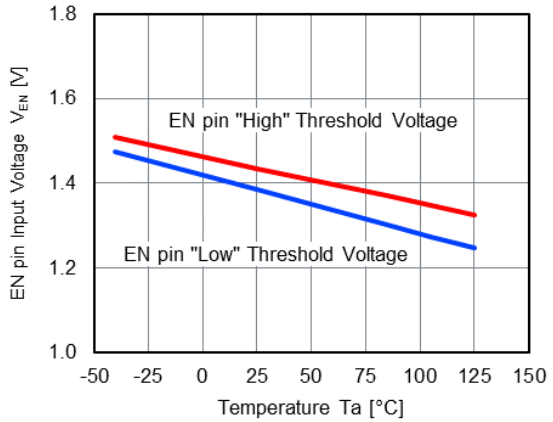

8) Dropout Voltage vs Output Current

V_{SET} = 3.3 V

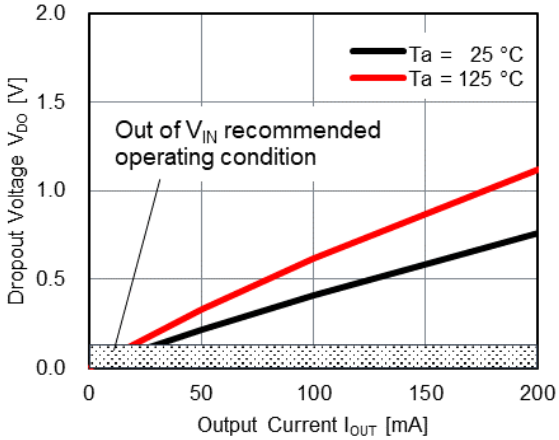

V_{SET} = 5 V

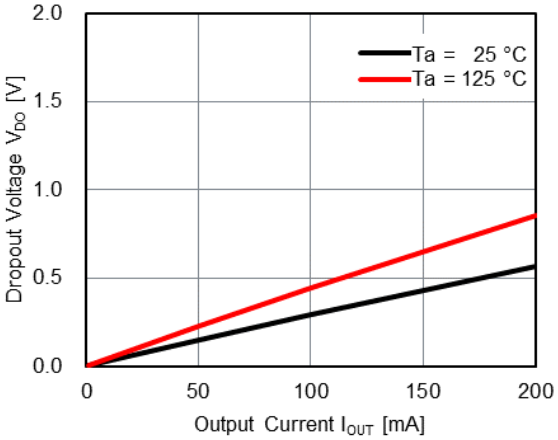

V_{SET} = 9 V

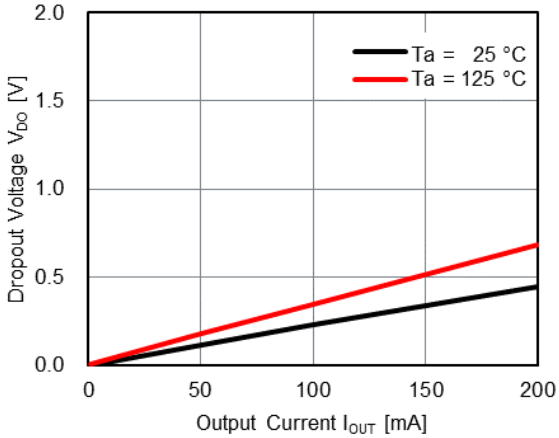

9) Dropout Voltage vs Set Output Voltage

T_a = 25 °C

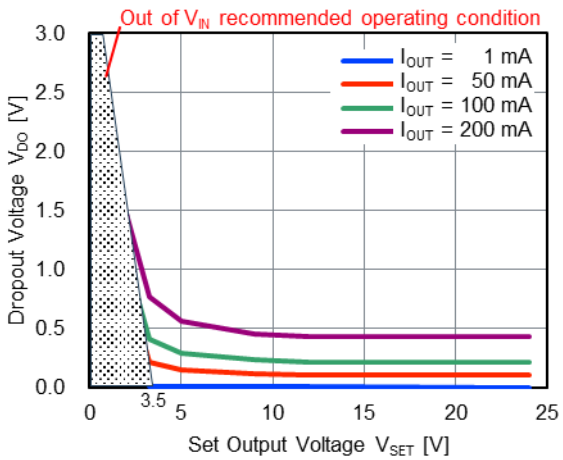

T_a = 125 °C

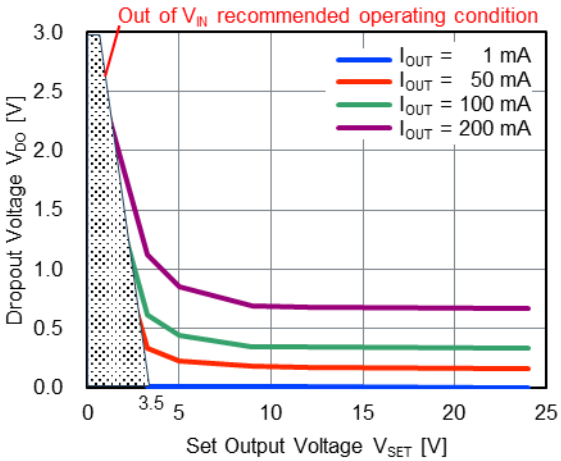

10) Load Regulation vs Set Output Voltage

$V_{IN} = V_{SET} + 4$ V

$I_{OUT} = 1$ mA to 100 mA

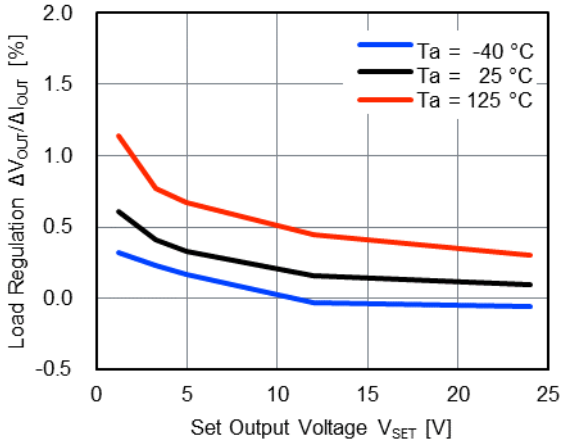

$I_{OUT} = 1$ mA to 200 mA

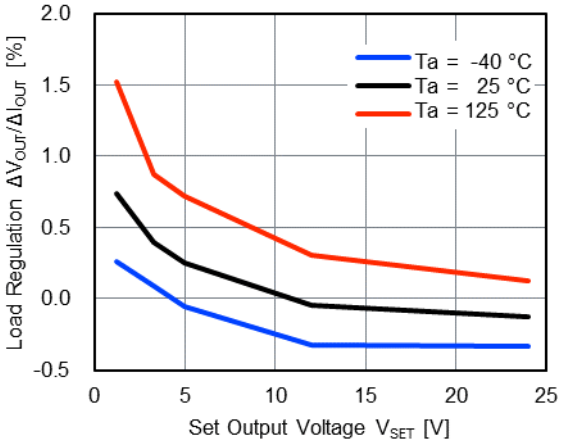

11) Ripple Rejection vs Frequency

C_{IN} = none, $V_{IN} = V_{SET} + 3$ V, Ripple 0.2 V_{P-P}

$V_{SET} = 1.2$ V

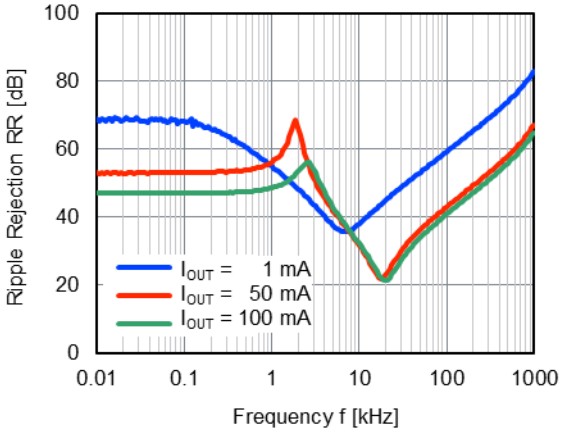

$V_{SET} = 5$ V

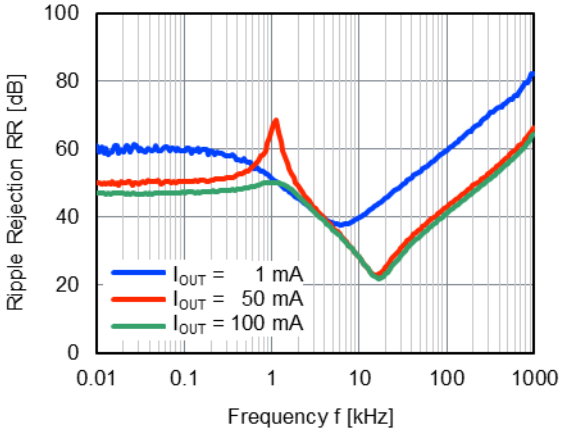

$V_{SET} = 12$ V

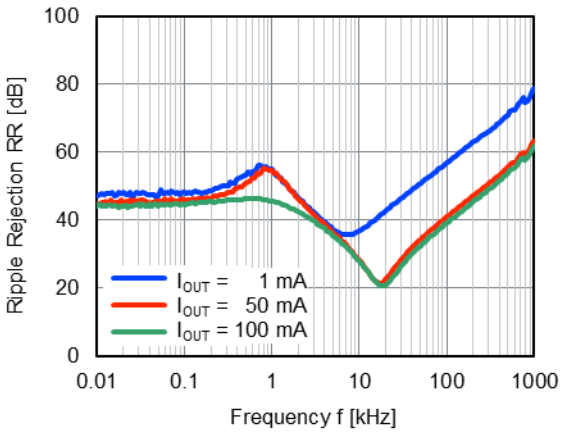

$V_{SET} = 24$ V

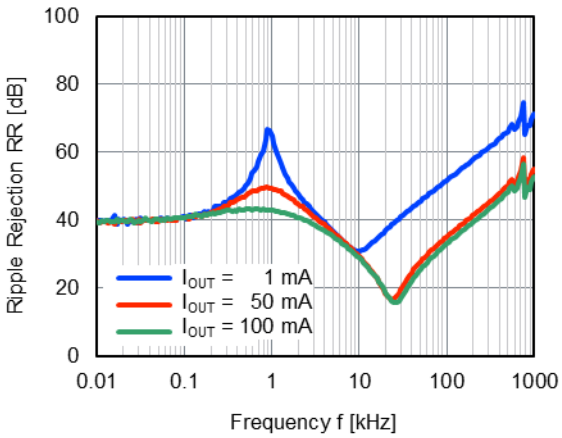

12) Ripple Rejection vs Input Voltage

C_{IN} = none, Ripple 0.2 V_{P-P}, I_{OUT} = 50 mA

V_{SET} = 1.2 V

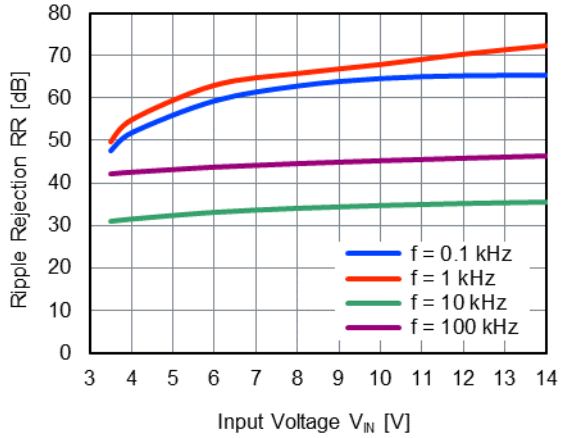

V_{SET} = 5 V

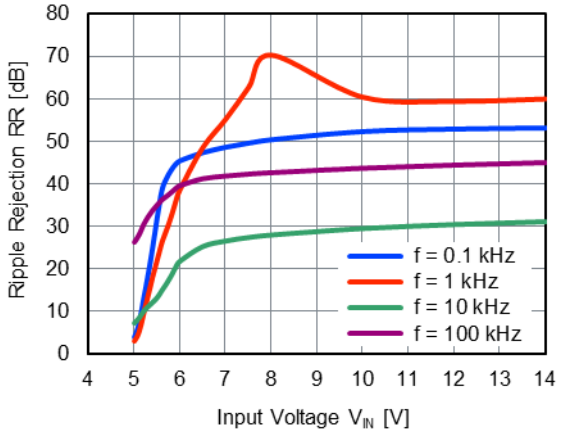

V_{SET} = 12 V

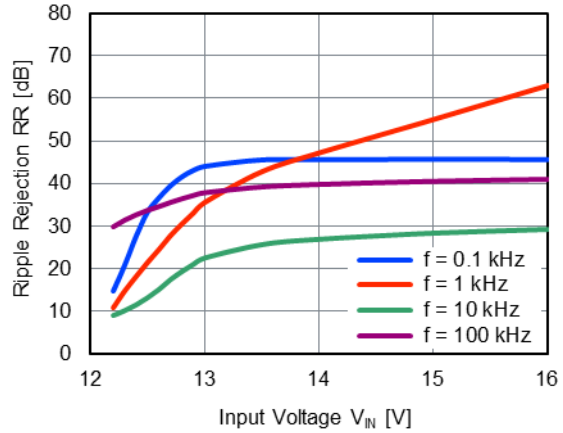

V_{SET} = 24 V

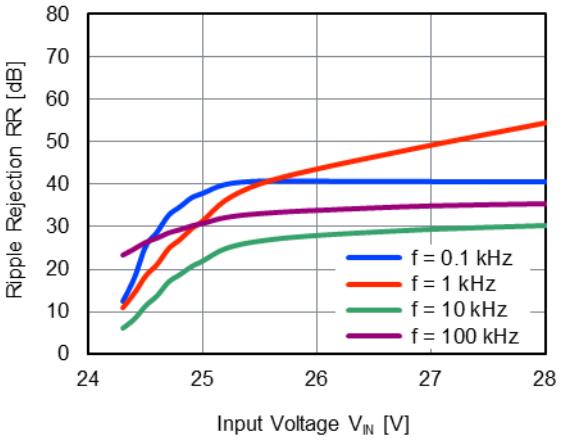

13) Line Transient Response

C_{IN} = none, t_R = t_F = 5 µs, I_{OUT} = 1 mA

V_{SET} = 1.2 V

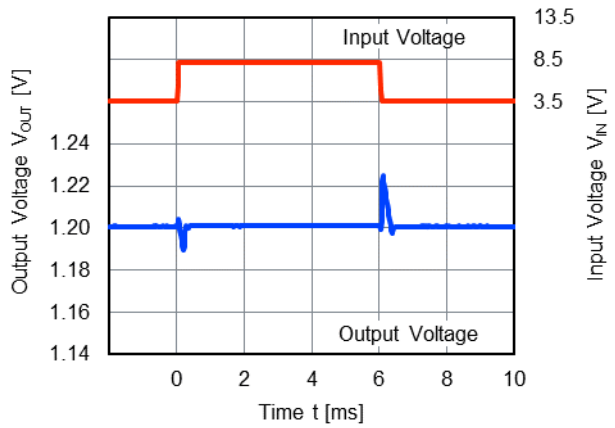

V_{SET} = 5 V

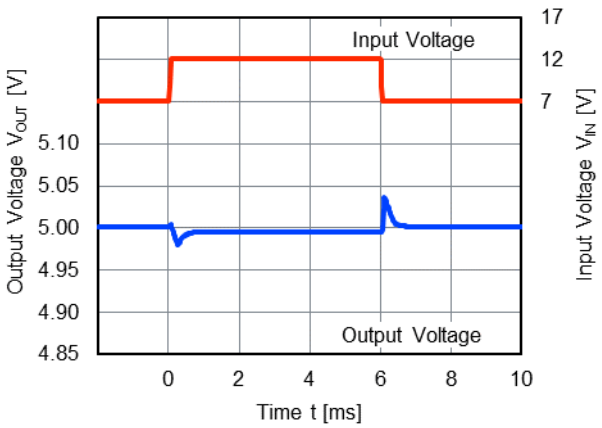

V_{SET} = 12 V

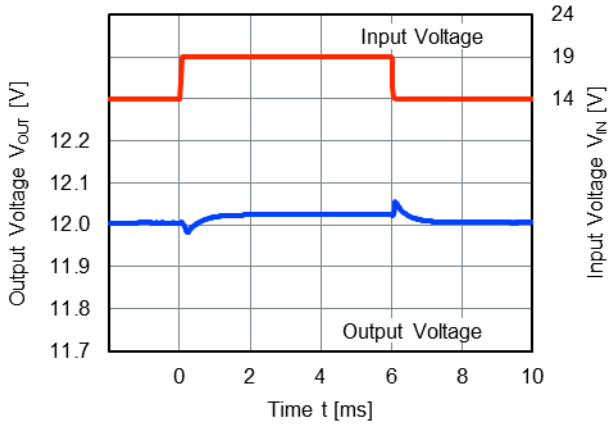

V_{SET} = 24 V

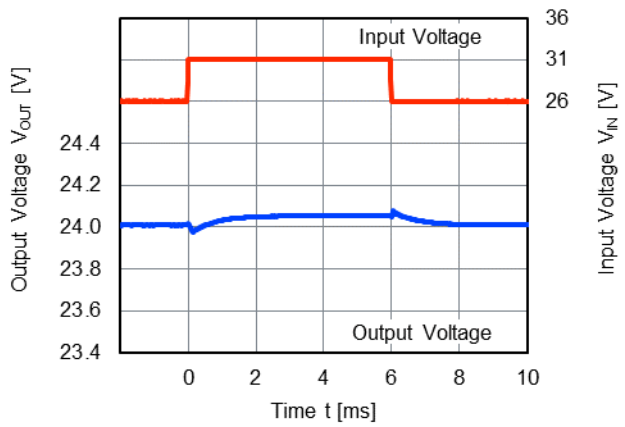

14) Load Transient Response

$t_R = t_F$ = 0.5 µs, $V_{IN} = V_{SET}$ + 2 V (Min. 3.5 V)

V_{SET} = 1.2 V

I_{OUT} = 1 mA ↔ 20 mA

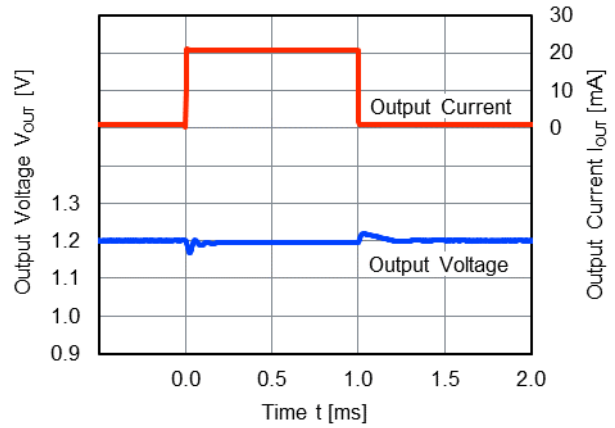

I_{OUT} = 1 mA ↔ 100 mA

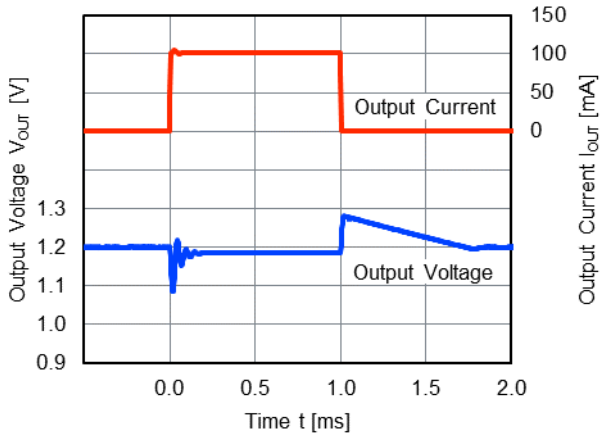

V_{SET} = 5 V

I_{OUT} = 1 mA ↔ 20 mA

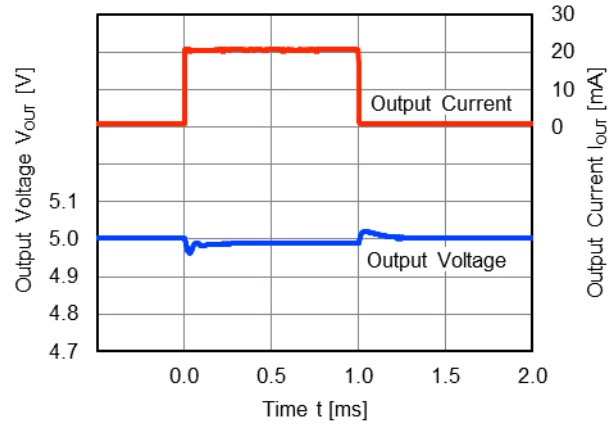

I_{OUT} = 1 mA ↔ 100 mA

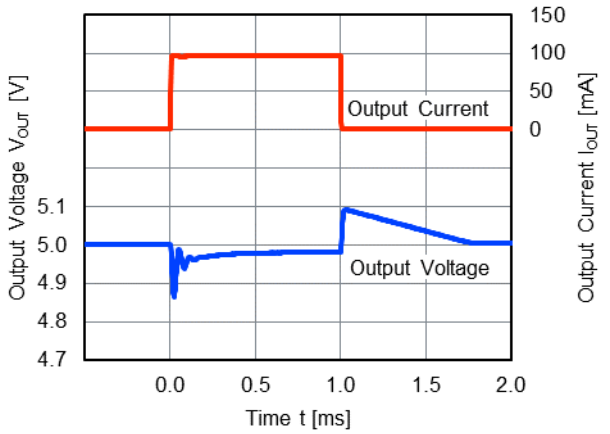

V_{SET} = 12 V
I_{OUT} = 1 mA ↔ 20 mA

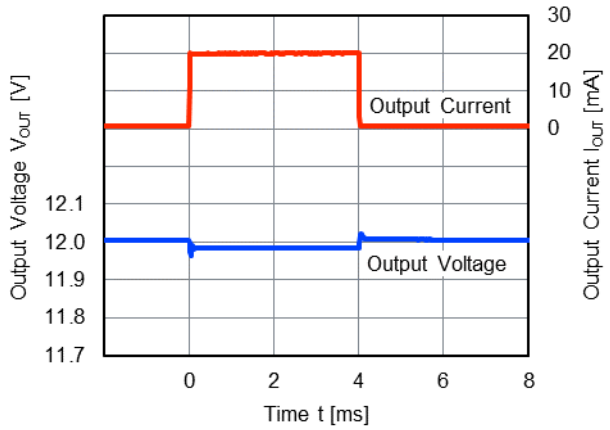

I_{OUT} = 1 mA ↔ 100 mA

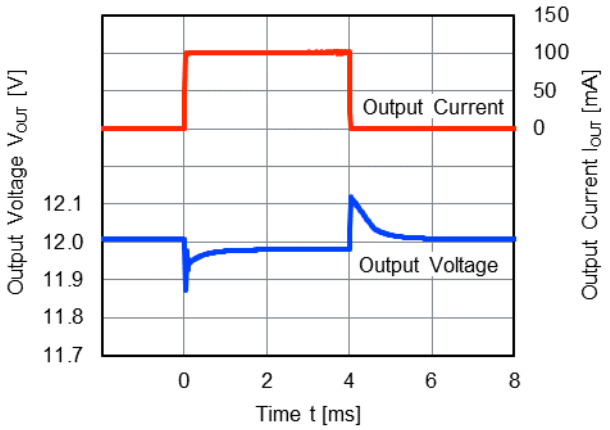

V_{SET} = 24 V
I_{OUT} = 1 mA ↔ 20 mA

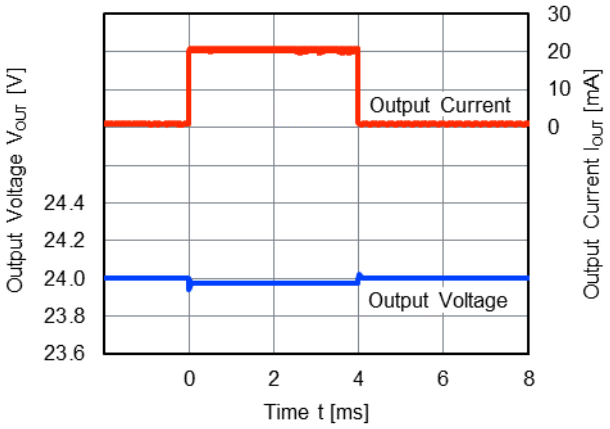

I_{OUT} = 1 mA ↔ 100 mA

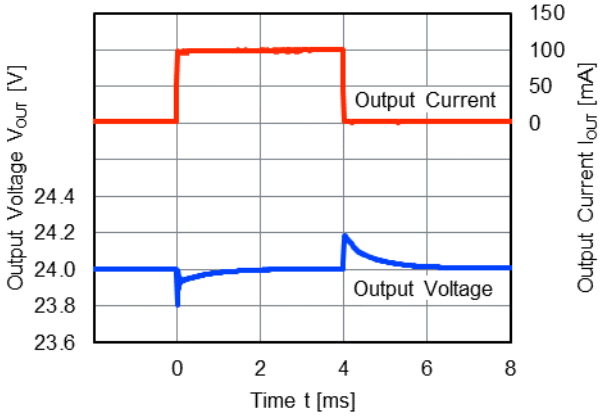

15) Turn on Speed with VIN = EN Pin
V_{IN} = V_{EN} = 0 V to V_{SET} + 2 V (Min. 3.5 V), I_{OUT} = 0 mA
V_{SET} = 1.2 V

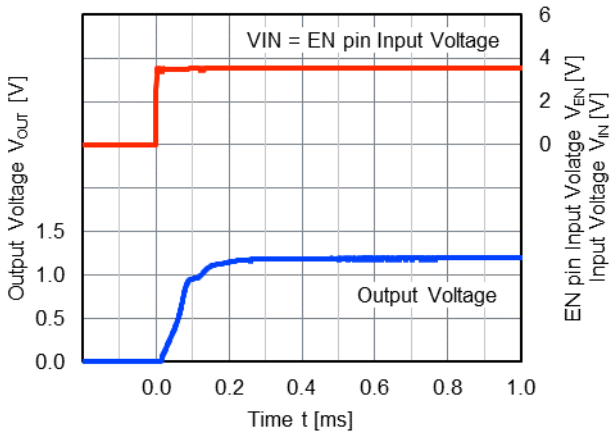

V_{SET} = 12 V

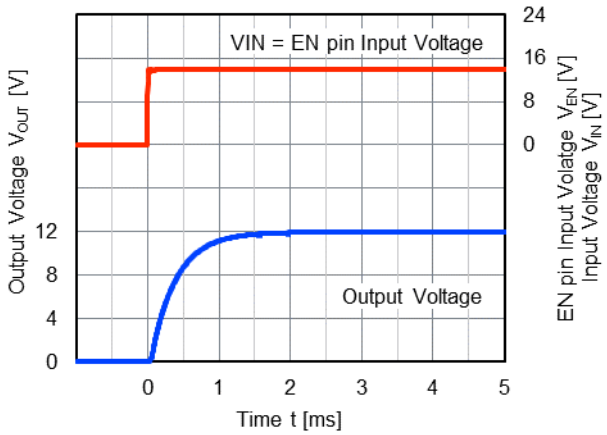

V_{SET} = 24 V

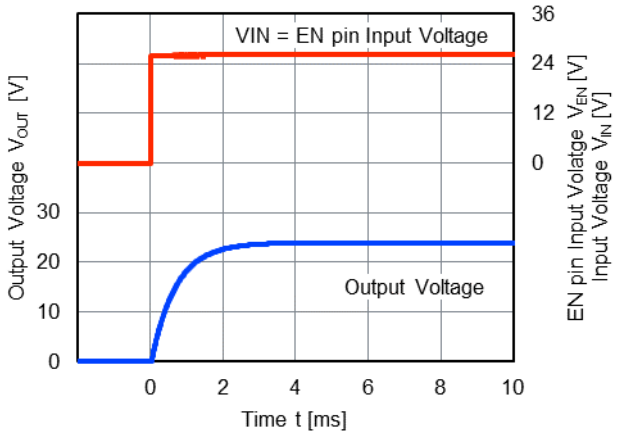

16) Turn off Speed with EN Pin

V_{IN} = V_{SET} + 2 V (Min. 3.5 V)

V_{SET} = 1.2 V

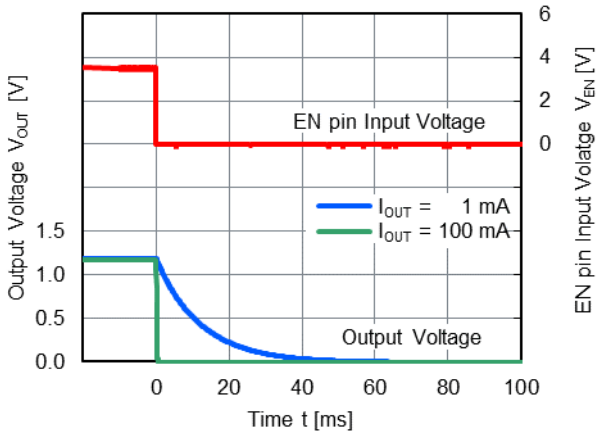

V_{SET} = 12 V

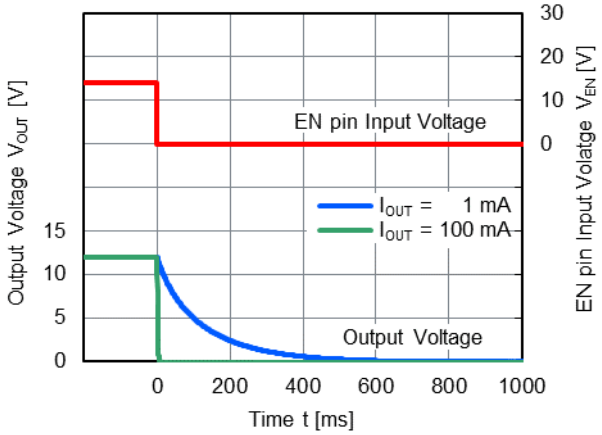

V_{SET} = 24 V

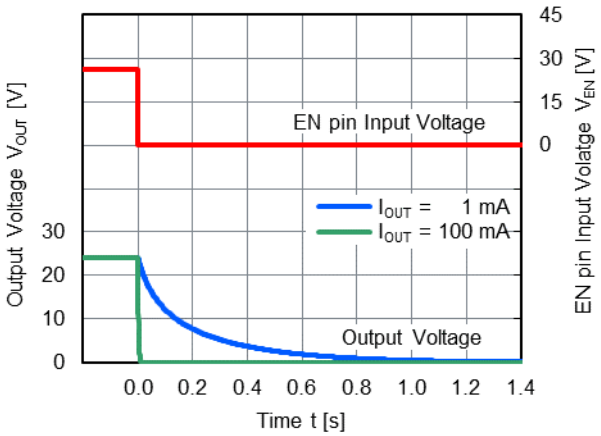

17) Inrush Current

$V_{IN} = V_{SET} + 2$ V (Min. 3.5 V), $I_{OUT} = 1$ mA

$V_{SET} = 1.2$ V

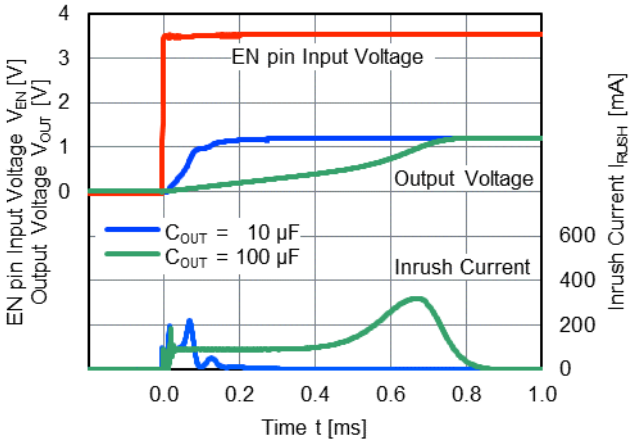

$V_{SET} = 12$ V

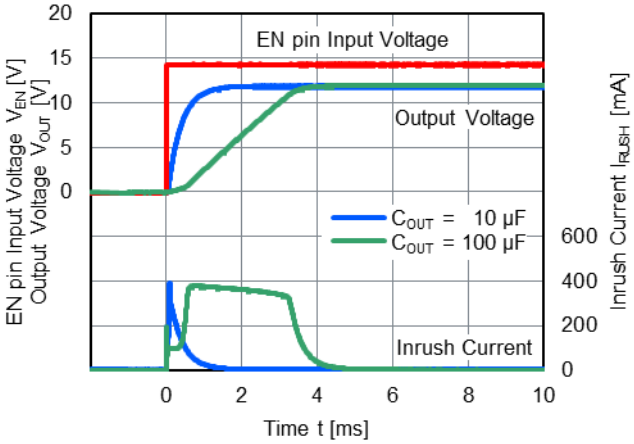

$V_{SET} = 24$ V

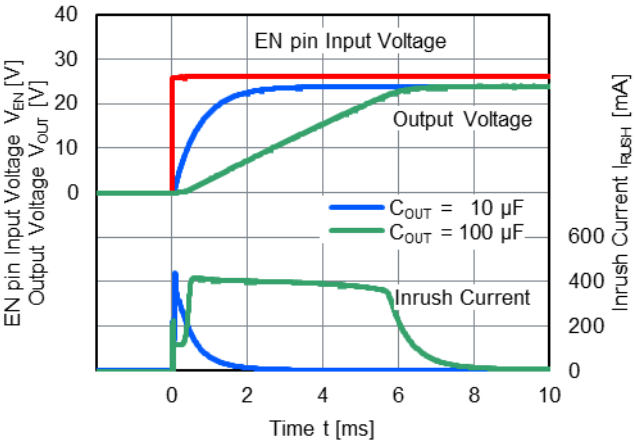

■ TEST CIRCUIT

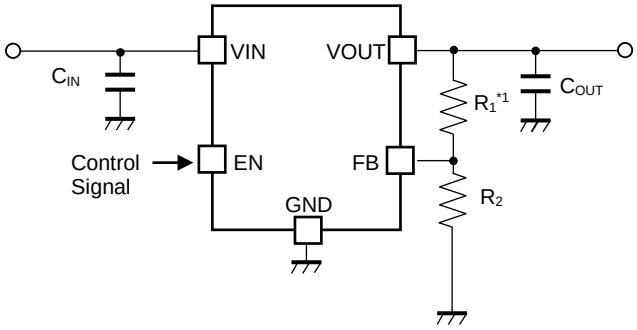

NR1700 Test Circuit

【Components List for Our Evaluation】

External Capacitors

Symbol	Capacitance	Parts Number
C_{IN}	0.1 µF	CGA2B3X7R1H104K
C_{OUT}	10 µF	CGA6P3X7S1H106K
	100 µF	EKY-500ELL101MHB5D

External Resistors

Symbol	Set Output Voltage (V_{SET})	Resistance
R_1*1	V_{SET} = 3.3 V	6.8 kΩ + 82 kΩ
	V_{SET} = 5.0 V	51 kΩ+ 110 kΩ
	V_{SET} = 9.0 V	300 Ω+ 330 kΩ
	V_{SET} = 12 V	4.7 kΩ+ 453 kΩ
	V_{SET} = 24 V	220 kΩ+ 750 kΩ
R_2	V_{SET} = 1.2, 3.3, 5.0, 9.0, 12, 24 V	51 kΩ

*1 Two resistors are connected in series.

Nisshinbo Micro Devices Inc.

SOT-23-5-DC

PI-SOT-23-5-DC-01-E-A

■ PACKAGE DIMENSIONS

UNIT: mm

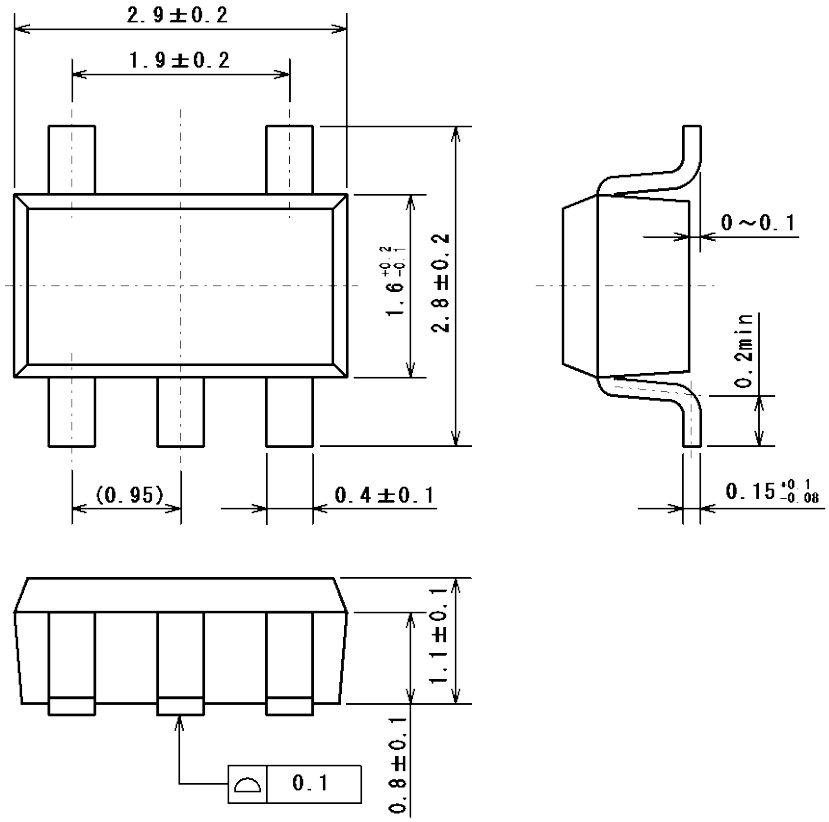

■ EXAMPLE OF SOLDER PADS DIMENSIONS

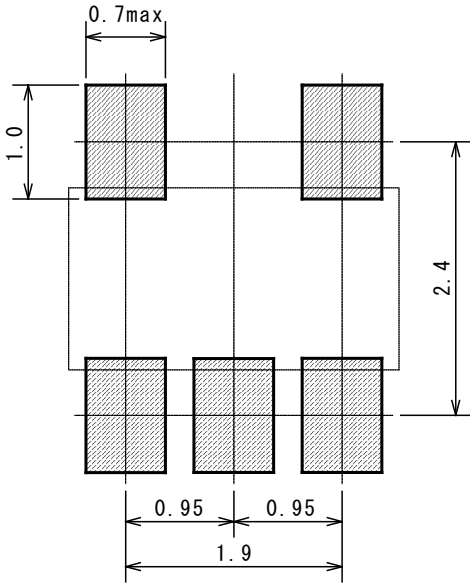

Nisshinbo Micro Devices Inc.

SOT-23-5-DC

PI-SOT-23-5-DC-01-E-A

■ PACKING SPEC

UNIT: mm

(1) Taping dimensions / Insert direction

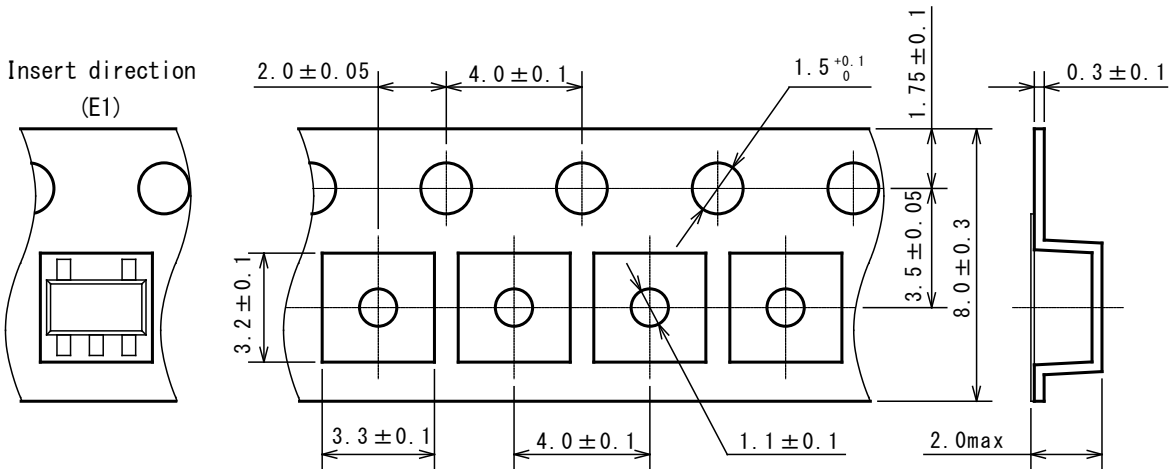

(2) Taping state

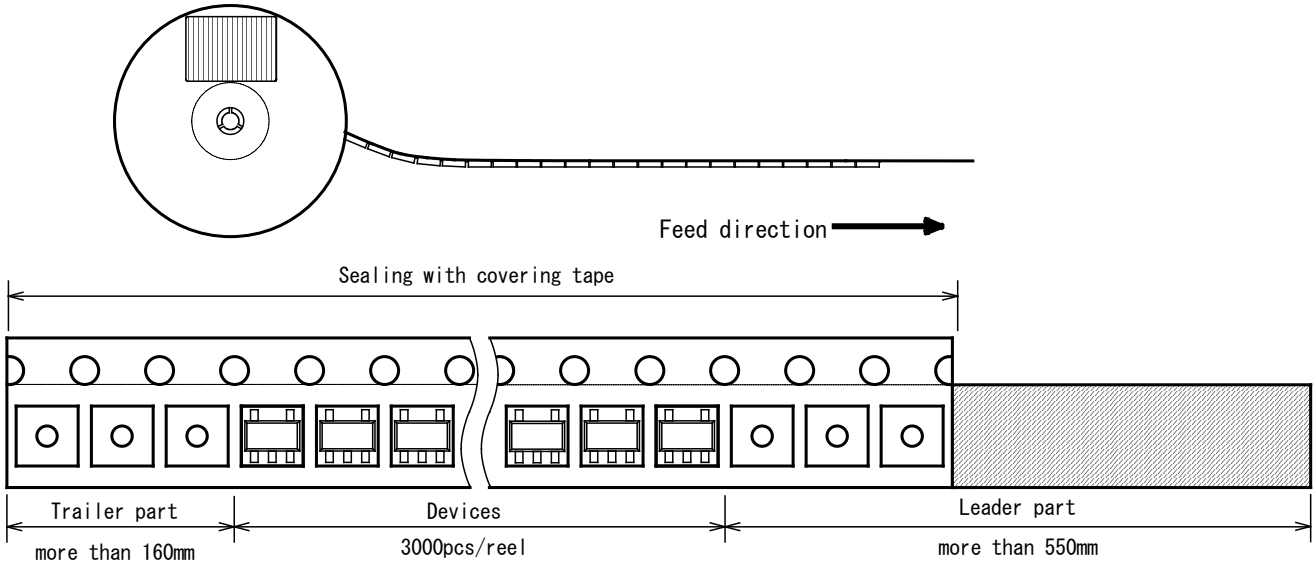

(3) Reel dimensions

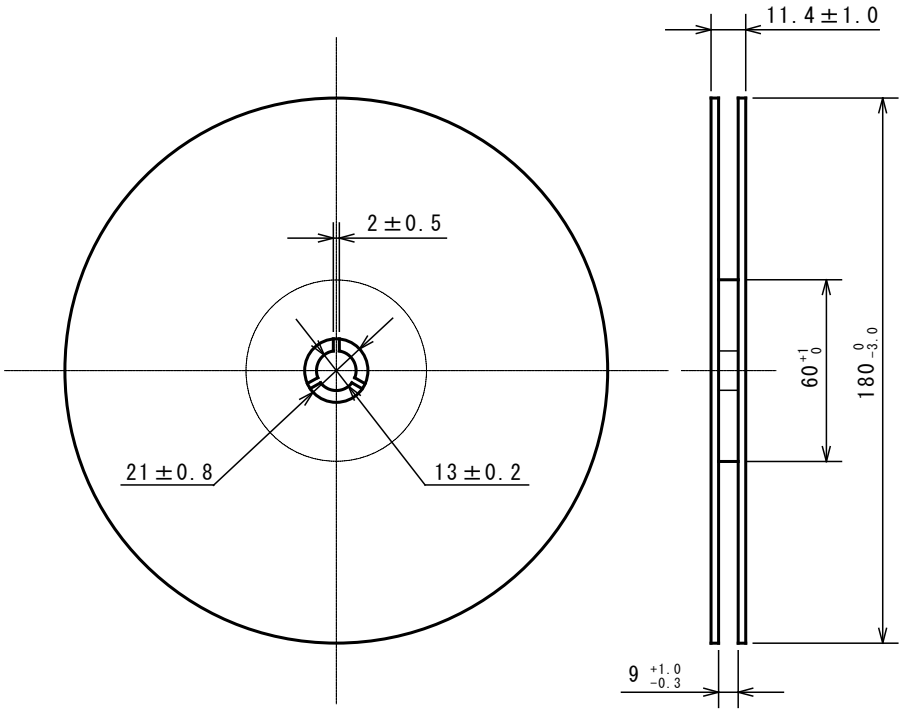

(4) Peeling strength

Peeling strength of cover tape

- Peeling angle 165 to 180° degrees to the taped surface.
- Peeling speed 300mm/min
- Peeling strength 0.1 to 1.0N

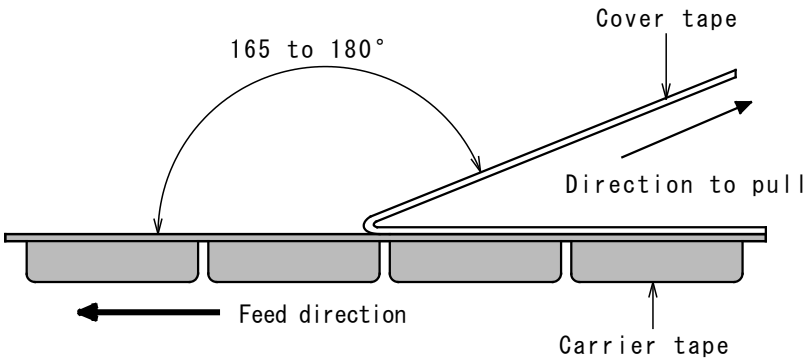

(5) Packing state

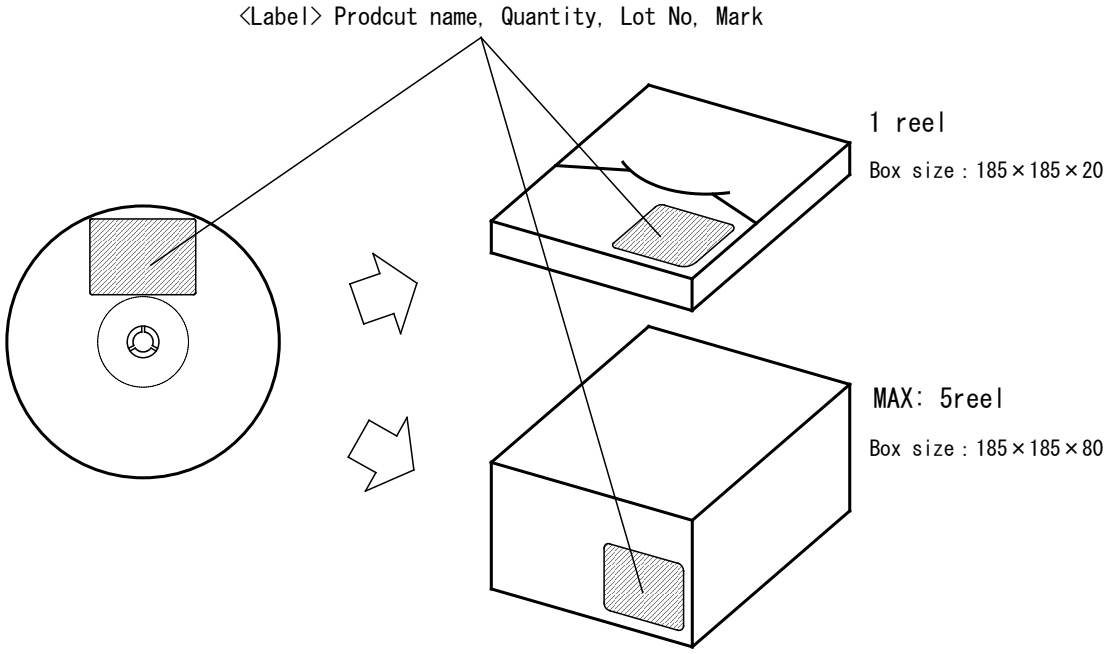

■ **HEAT-RESISTANCE PROFILES**

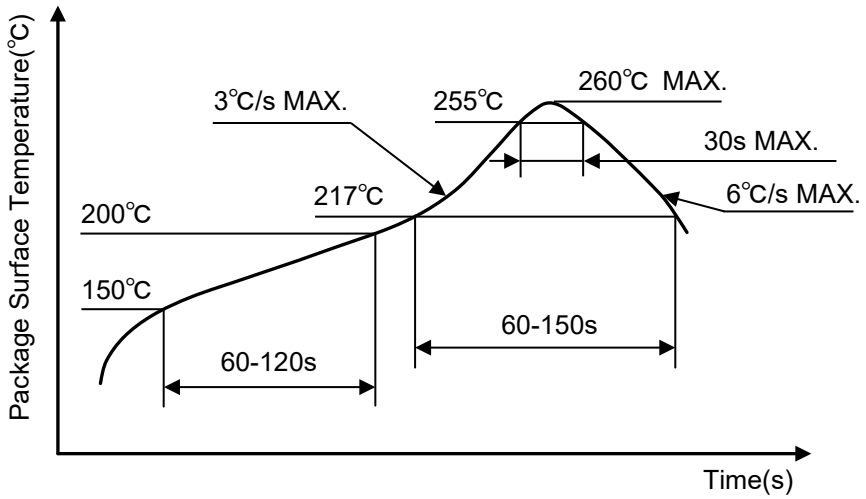

Reflow profile

Nisshinbo Micro Devices Inc.

SOT-89-5-DM

PI-SOT-89-5-DM-E-A

■ PACKAGE DIMENSIONS

UNIT: mm

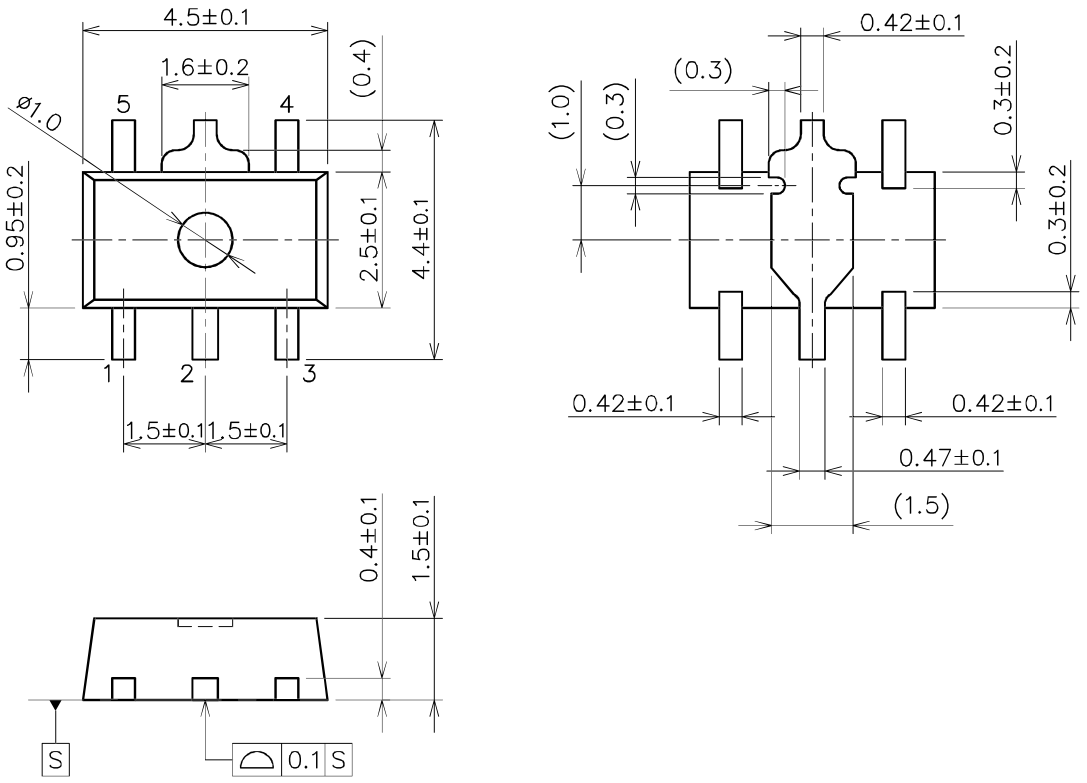

■ EXAMPLE OF SOLDER PADS DIMENSIONS

UNIT: mm

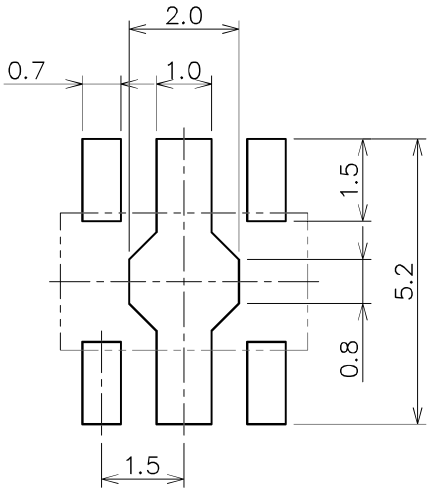

Nisshinbo Micro Devices Inc.

SOT-89-5-DM

PI-SOT-89-5-DM-E-A

■ PACKING SPEC

UNIT: mm

(1) Taping dimensions / Insert direction

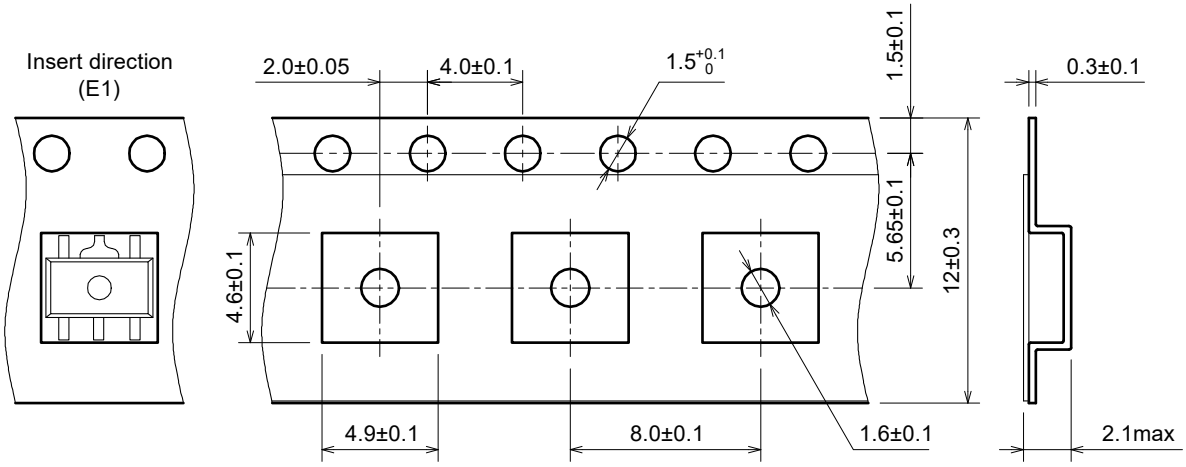

(2) Taping state

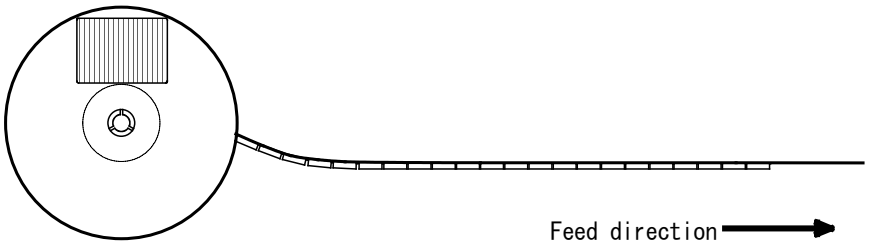

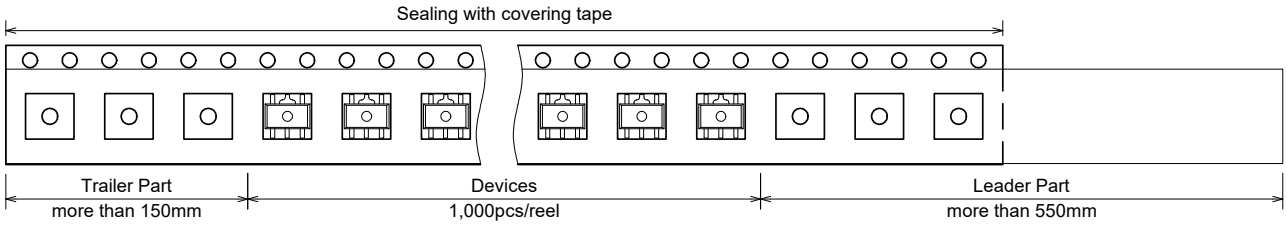

Nisshinbo Micro Devices Inc.

SOT-89-5-DM

PI-SOT-89-5-DM-E-A

(3) Reel dimensions

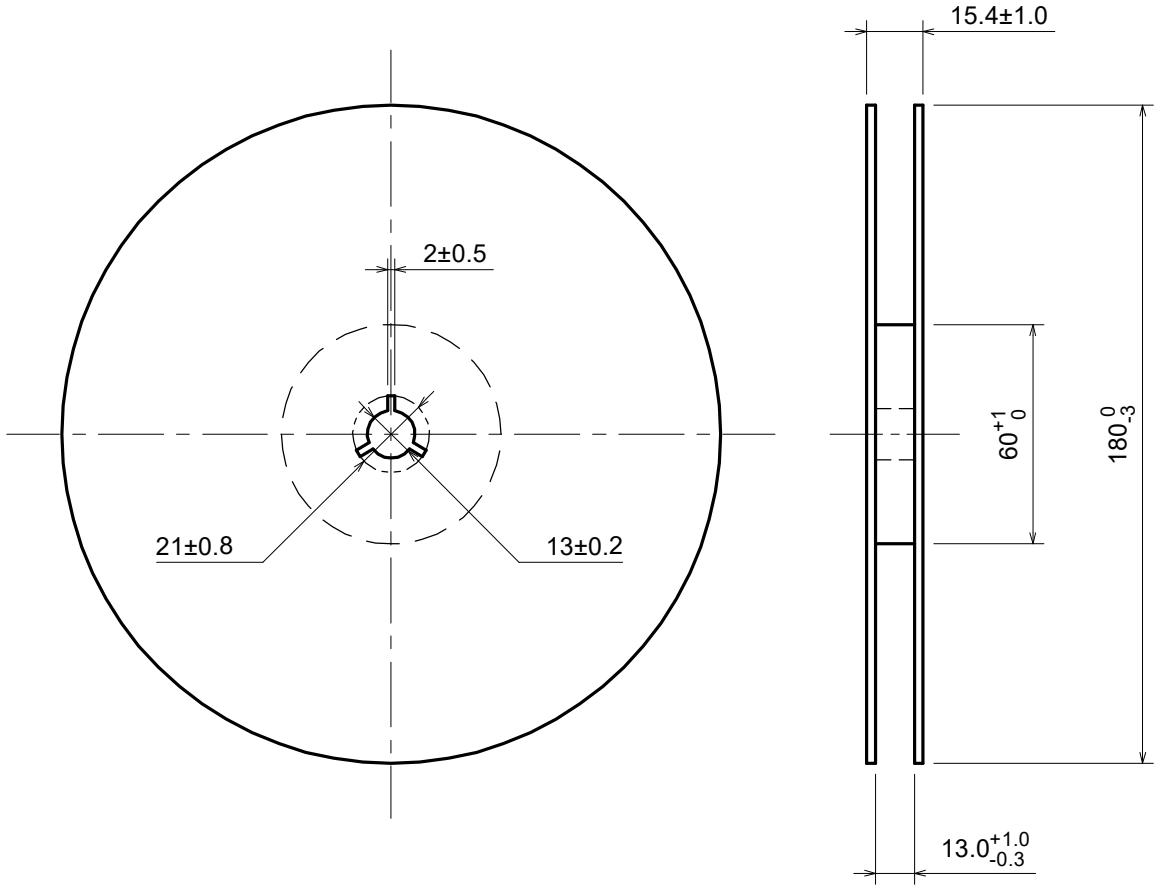

(4) Peeling strength

Peeling strength of cover tape

- Peeling angle 165 to 180°degrees to the taped surface.
- Peeling speed 300mm/min
- Peeling strength 0.1 to 1.3N

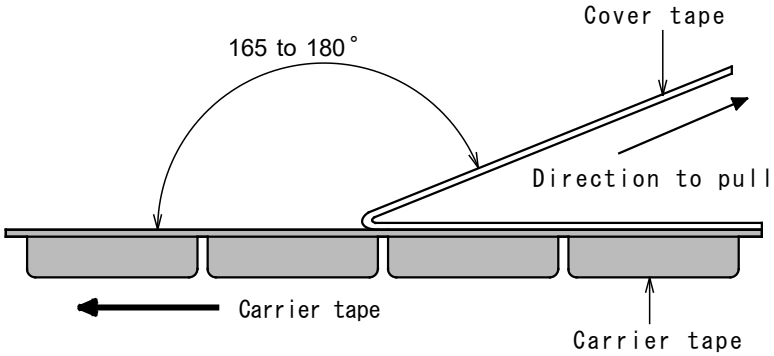

(5) Packing state

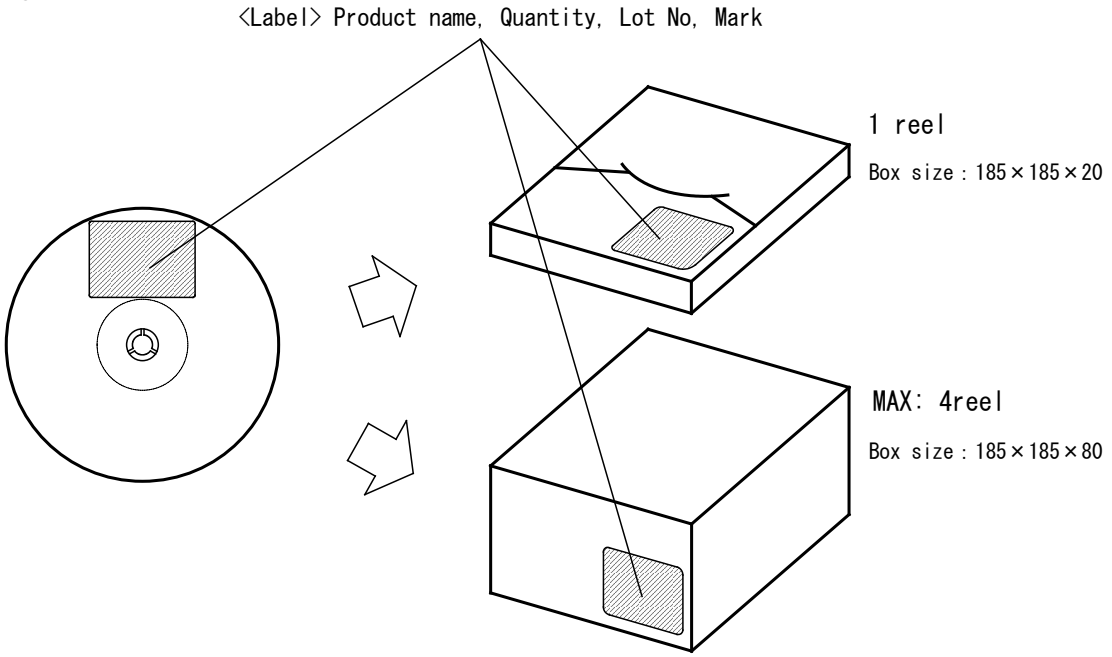

■ **HEAT-RESISTANCE PROFILES**

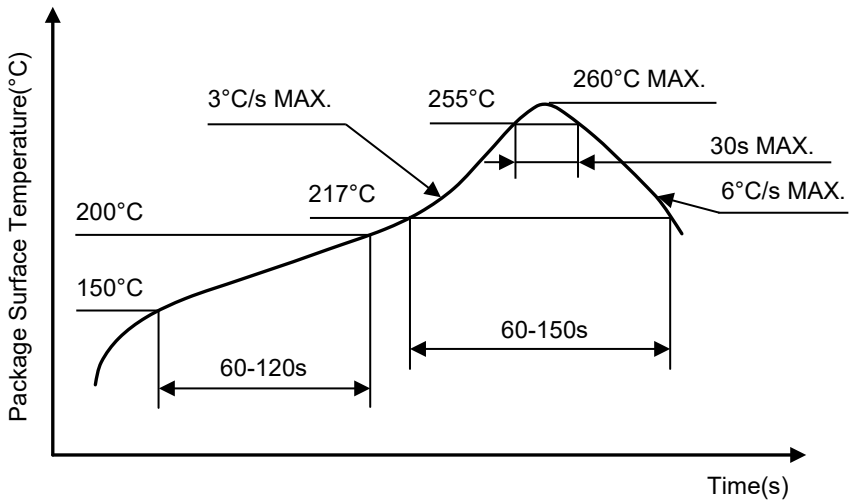

Reflow profile

Nisshinbo Micro Devices Inc.

DFN(PL)2018-6-GZ

PI-DFN(PL)2018-6-GZ-E-A

■ PACKAGE DIMENSIONS

UNIT: mm

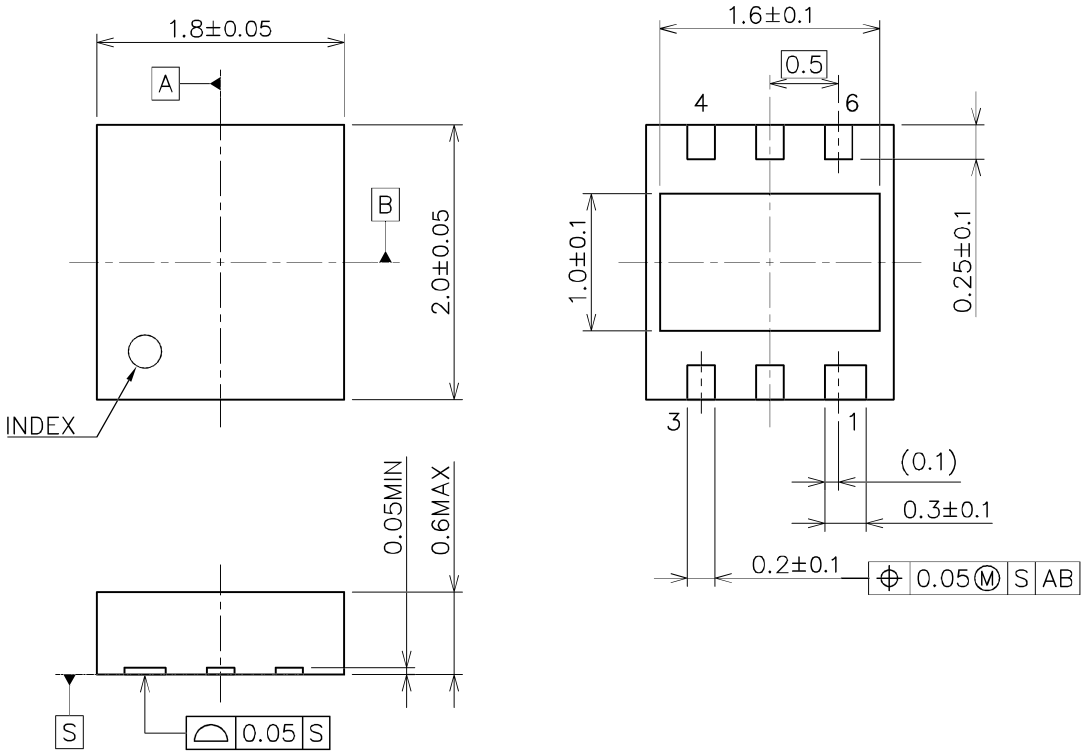

■ EXAMPLE OF SOLDER PADS DIMENSIONS

UNIT: mm

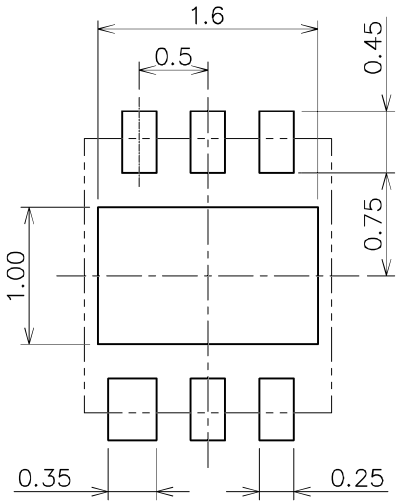

Nisshinbo Micro Devices Inc.

DFN(PL)2018-6-GZ

PI-DFN(PL)2018-6-GZ-E-A

■ PACKING SPEC

UNIT: mm

(1) Taping dimensions / Insert direction

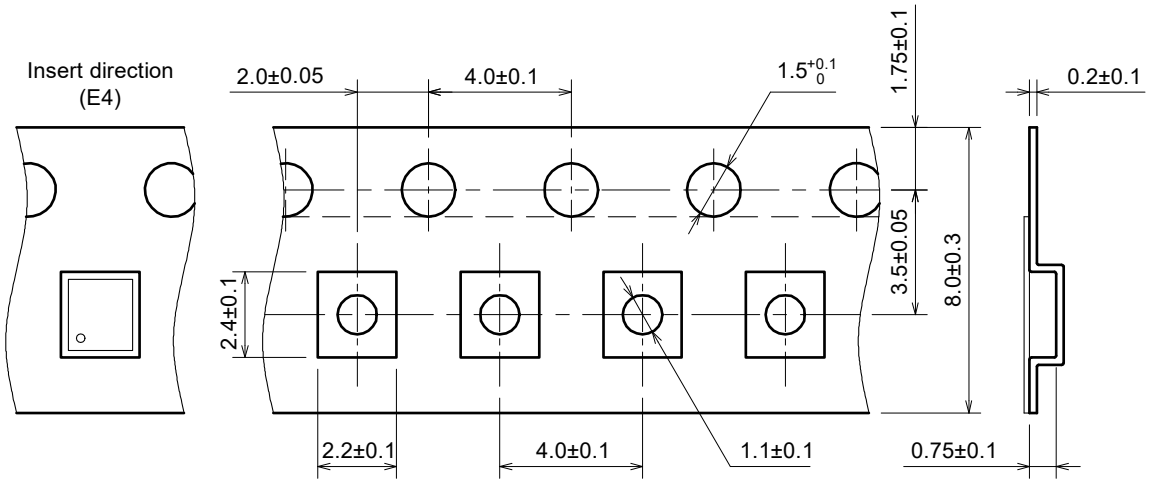

(2) Taping state

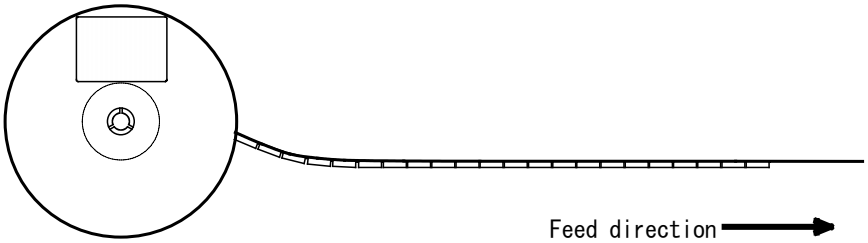

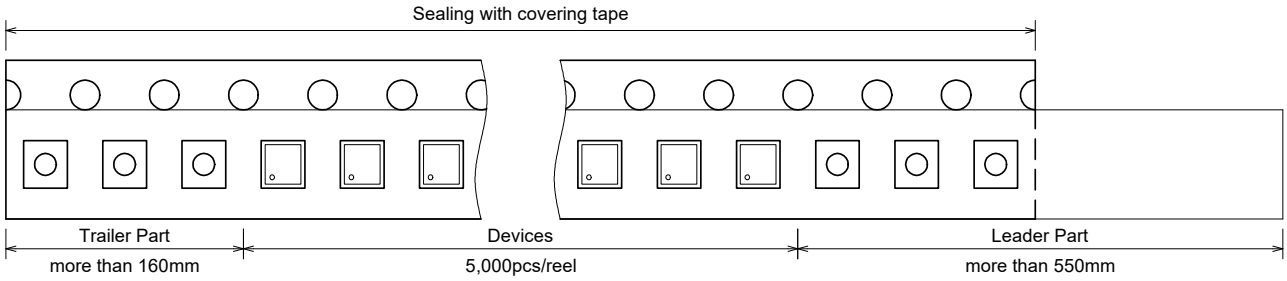

(3) Reel dimensions

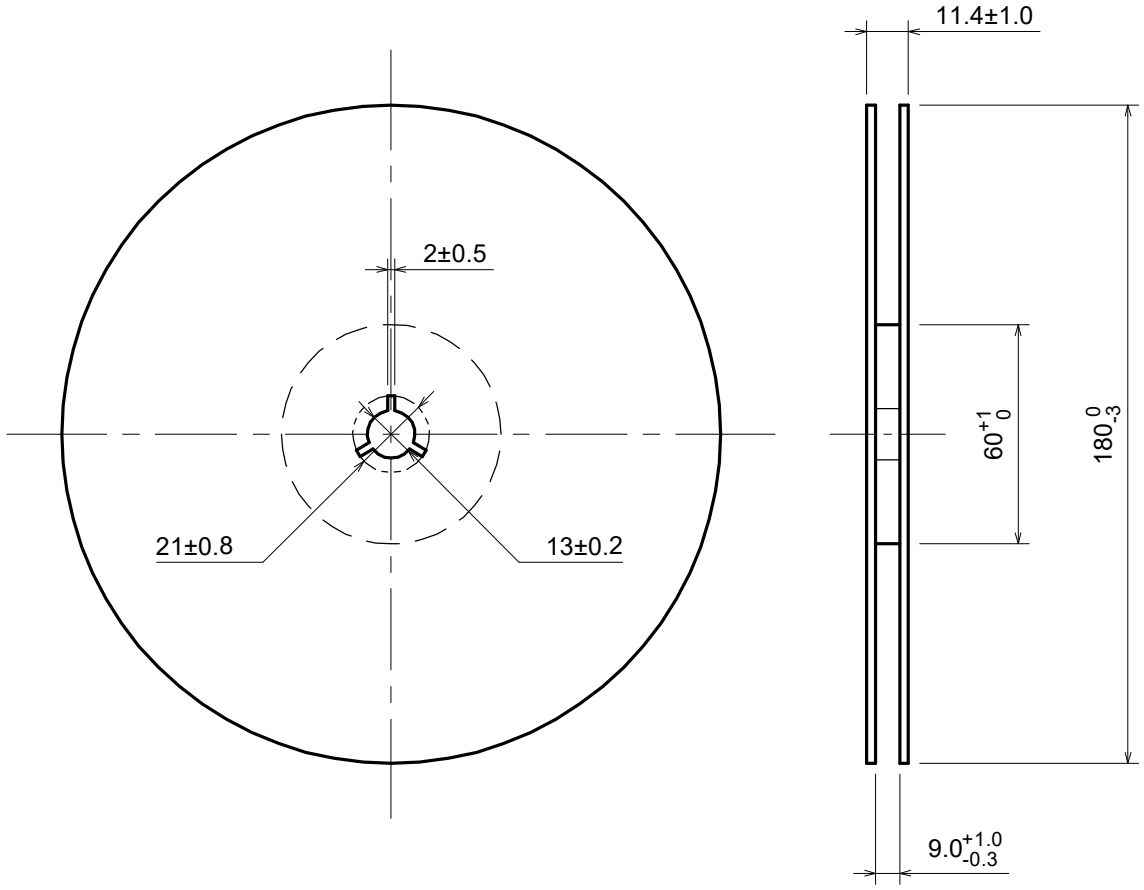

(4) Peeling strength

Peeling strength of cover tape

- Peeling angle 165 to 180°degrees to the taped surface.
- Peeling speed 300mm/min
- Peeling strength 0.1 to 1.0N

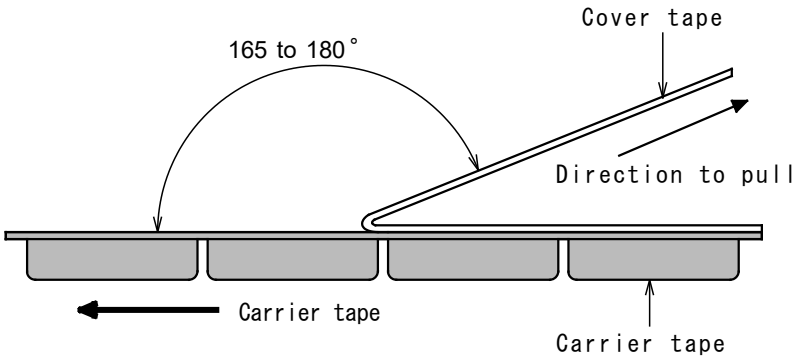

(5) Packing state

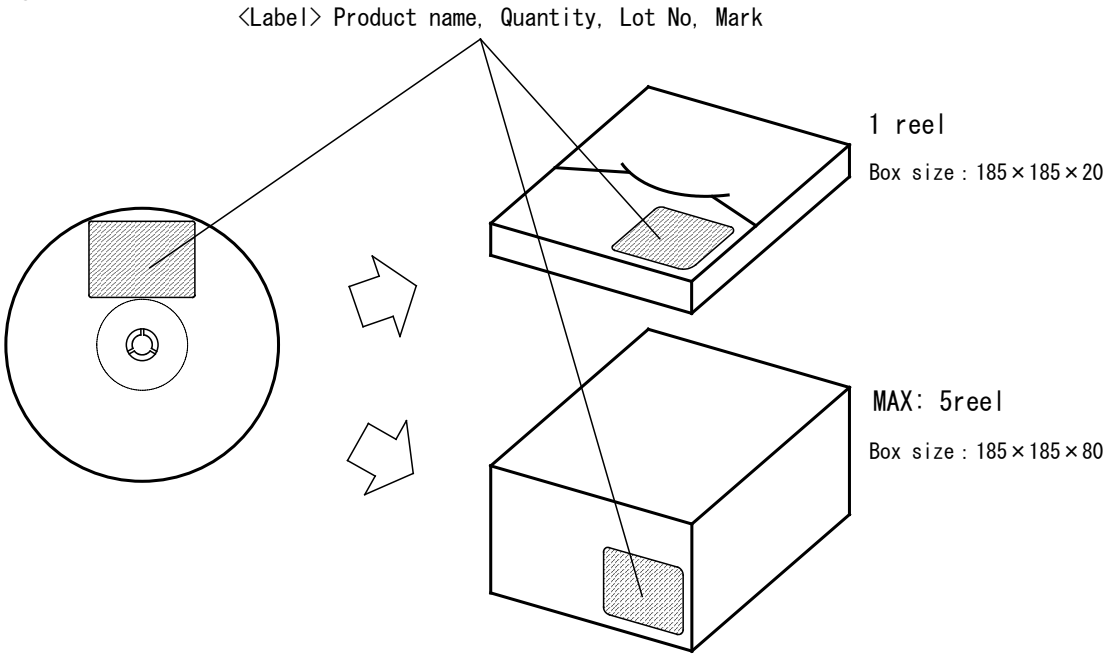

■ **HEAT-RESISTANCE PROFILES**

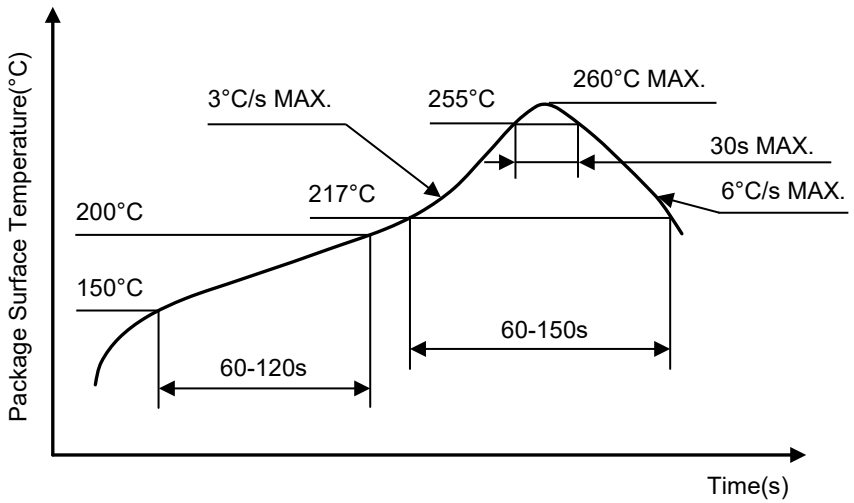

Reflow profile

REVISION HISTORY

Date	Revision	Changes
July 22, 2024	Ver. 1.0	Initial release
January 07, 2025	Ver.1.1	・Changed the minimum specifications of the "FB Voltage Accuracy" and "Line Regulation" . FB Voltage Accuracy (@-40℃≤j≤125℃,VIN=3.5V to 26V): -2.50% → -3.67% Line Regulation: -0.074%/V → -0.128%/V ・Deleted the VIN condition in 12) Ripple Rejection vs Input Voltage of "TYPICAL CHARACTERISTICs" .
January 20, 2026	Ver.1.2	Change the format.

1. The products and the product specifications described in this document are subject to change or discontinuation of production without notice for reasons such as improvement. Therefore, before deciding to use the products, please refer to our sales representatives for the latest information thereon.
2. The materials in this document may not be copied or otherwise reproduced in whole or in part without the prior written consent of us.
3. This product and any technical information relating thereto are subject to complementary export controls (so-called KNOW controls) under the Foreign Exchange and Foreign Trade Law, and related politics ministerial ordinance of the law. (Note that the complementary export controls are inapplicable to any application-specific products, except rockets and pilotless aircraft, that are insusceptible to design or program changes.) Accordingly, when exporting or carrying abroad this product, follow the Foreign Exchange and Foreign Trade Control Law and its related regulations with respect to the complementary export controls.
4. The technical information described in this document shows typical characteristics and example application circuits for the products. The release of such information is not to be construed as a warranty of or a grant of license under our or any third party's intellectual property rights or any other rights.
5. The products listed in this document are intended and designed for use as general electronic components in standard applications (office equipment, telecommunication equipment, measuring instruments, consumer electronic products, amusement equipment etc.). Those customers intending to use a product in an application requiring extreme quality and reliability, for example, in a highly specific application where the failure or misoperation of the product could result in human injury or death should first contact us.
   - Aerospace Equipment
   - Equipment Used in the Deep Sea
   - Power Generator Control Equipment (nuclear, steam, hydraulic, etc.)
   - Life Maintenance Medical Equipment
   - Fire Alarms / Intruder Detectors
   - Vehicle Control Equipment (automotive, airplane, railroad, ship, etc.)
   - Various Safety Devices
   - Traffic control system
   - Combustion equipment

   In case your company desires to use this product for any applications other than general electronic equipment mentioned above, make sure to contact our company in advance. Note that the important requirements mentioned in this section are not applicable to cases where operation requirements such as application conditions are confirmed by our company in writing after consultation with your company.
6. We are making our continuous effort to improve the quality and reliability of our products, but semiconductor products are likely to fail with certain probability. In order to prevent any injury to persons or damages to property resulting from such failure, customers should be careful enough to incorporate safety measures in their design, such as redundancy feature, fire containment feature and fail-safe feature. We do not assume any liability or responsibility for any loss or damage arising from misuse or inappropriate use of the products.
7. The products have been designed and tested to function within controlled environmental conditions. Do not use products under conditions that deviate from methods or applications specified in this datasheet. Failure to employ the products in the proper applications can lead to deterioration, destruction or failure of the products. We shall not be responsible for any bodily injury, fires or accident, property damage or any consequential damages resulting from misuse or misapplication of the products.
8. Quality Warranty

   8-1. Quality Warranty Period

   In the case of a product purchased through an authorized distributor or directly from us, the warranty period for this product shall be one (1) year after delivery to your company. For defective products that occurred during this period, we will take the quality warranty measures described in section 8-2. However, if there is an agreement on the warranty period in the basic transaction agreement, quality assurance agreement, delivery specifications, etc., it shall be followed.

   8-2. Quality Warranty Remedies

   When it has been proved defective due to manufacturing factors as a result of defect analysis by us, we will either deliver a substitute for the defective product or refund the purchase price of the defective product.

   Note that such delivery or refund is sole and exclusive remedies to your company for the defective product.

   8-3. Remedies after Quality Warranty Period

   With respect to any defect of this product found after the quality warranty period, the defect will be analyzed by us. On the basis of the defect analysis results, the scope and amounts of damage shall be determined by mutual agreement of both parties. Then we will deal with upper limit in Section 8-2. This provision is not intended to limit any legal rights of your company.
9. Anti-radiation design is not implemented in the products described in this document.
10. The X-ray exposure can influence functions and characteristics of the products. Confirm the product functions and characteristics in the evaluation stage.
11. WLCSP products should be used in light shielded environments. The light exposure can influence functions and characteristics of the products under operation or storage.
12. Warning for handling Gallium and Arsenic (GaAs) products (Applying to GaAs MMIC, Photo Reflector). These products use Gallium (Ga) and Arsenic (As) which are specified as poisonous chemicals by law. For the prevention of a hazard, do not burn, destroy, or process chemically to make them as gas or power. When the product is disposed of, please follow the related regulation and do not mix this with general industrial waste or household waste.
13. Please contact our sales representatives should you have any questions or comments concerning the products or the technical information.

NISSHINBO

Nisshinbo Micro Devices Inc.

Official website

https://www.nisshinbo-microdevices.co.jp/en/

Purchase information

https://www.nisshinbo-microdevices.co.jp/en/buy/