XFP-XGS-OLT-N1-C

MSA Compliant 10GBase-N1 XFP OLT Transceiver (SMF, 1577nmTx/1270nmRx, 20km, SC, DOM)

Features:

- XFP package with SC receptacle optical interface compliant
- MSA SFF-8077iv4.5 Compliant
- IEEE 802.3av Compliant
- Hot-Pluggable
- 10.3125Gbps & 2.5G & 1.25Gbps downstream and 10.3125Gbps & 1.25Gbps upstream
- +3.3V single power supply
- Operating Temperature: 0C to 70C
- RoHS compliant

Applications:

- PON
- Broadband Access

Product Description

This MSA compliant XFP OLT transceiver provides 10GBase-N1 throughput up to 20km over single-mode fiber (SMF) using a wavelength of 1577nmTx/1270nmRx via a SC connector. It is built to MSA standards and is uniquely serialized and data-traffic and application tested to ensure that they will integrate into your network seamlessly. Digital optical monitoring (DOM) support is also present to allow access to real-time operating parameters. We stand behind the quality of our products and proudly offer a limited lifetime warranty.

ProLabs' transceivers are RoHS compliant and lead-free.

Absolute Maximum Ratings

Parameter	Symbol	Min.	Max.	Unit
Maximum Supply Voltage	VCC	0	+3.6	V
Storage Ambient Temperature	Tstg	-40	+85	°C
Operating Case Temperature	Tc	0	70	°C
Relative Humidity	RH	5	95	%

Electrical Characteristics

Parameter	Symbol	Min.	Typ.	Max.	Unit	Notes
Power Supply Voltage	Vcc	3.13	3.3	3.47	V	
Power Supply Current	Icc			1200	mA	
Power Consumption	P			4	W	
LVPECL Single Ended Data Input Swing		100		1200	mV	
LVPECL Single Ended Data Output Swing		200		800	mV	
CML Single Ended Data Input Swing		100		600	mV	
CML Single Ended Data Output Swing		300		500	mV	
Differential Data Input Impedance			100		Ω	
Signal Level （LVTTL）	V_{OH}	2.4		VCC	V	
	V_{OL}	0		0.8	V	

Optical Characteristics

Parameter	Symbol	Min.	Typ.	Max.	Unit	Notes
Transmitter						
TX 10G Data Rate			10.3125G ±100ppm		Bit/s	
Launch Optical Power -10G	Po	+2		+5	dBm	
Center Wavelength Range -10G	λc	1575	1577	1580	nm	
Extinction Ratio -10G	EX	6			dB	
Spectral Width(@-20dB) -10G	Δλ			1	nm	
Side Mode Suppressing Ratio -10G	SMSR	30			dB	
Eye Diagram -10G		Complies with IEEE802.3av				
Dispersion Penalty -10G				1.5	dB	
RIN15 OMA -10G				-128	dB/Hz	
TX 2.5G Data Rate			2.5G± 100ppm			
TX 1G Data Rate			1.25G± 100ppm		Bit/s	
Launch Optical Power - 1G/2.5G	Po	+4.3		+9.3		
Center Wavelength Range -1G/2.5G	λc	1480	1490	1500	bit/s	
Extinction Ratio - 2.5G	EX	8.2			dBm	
Extinction Ratio - 1G	EX	9			nm	
Spectral Width(@-20dB) -1G/2.5G	Δλ			1	dB	
Side Mode Suppressing Ratio -1G/2.5G	SMSR	30			dB	
Eye Diagram		Complies with IEEE802.3ah				
Dispersion Penalty-1G/2.5G				1	dB	
RIN15 OMA -1G/2.5G	RIN			-115	dB/Hz	
TX off Optical Power	Poff			-39	dBm	
Optical return loss tolerance				15	dB	
Transmitter reflectance				-10	dB	
Receiver						
Receiver Optical Wavelength	λin	1260		1360	nm	
Damage Optical Power			10.325G ±100ppm		bit/s	
Receiver Sensitivity – 10G	S			-28	dBm	1
Overload Input Optical Power -10G	Pin	-6			dBm	1
Receiver Settling Time - 10G				800	ns	
RX 1G Data Rate			1.25G± 100ppm			
Receiver Sensitivity - 1G	S			-29.78	dBm	2

Overload Input Optical Power - 1G	Pin	-9.38			dBm	2
Receiver Settling Time - 1G				400	ns	
LOS Optical Dessert				-30	dBm	
LOS Optical Asset		-45			dBm	
LOS Hysteresis		0.5		6	dB	
Receiver Reflectance				-12	dB	
Burst Mode Receiver Dynamic Range		15			dB	

Notes:

1. Measured with a PRBS 2^{31}-1 NRZ test pattern, @10.3Gb/s, EX=6dB, BER<10^{-3};
2. Measured with a PRBS 2^{7}-1 NRZ test pattern, @1.25Gb/s, EX=9dB, BER<10^{-12}.

Principle Diagram

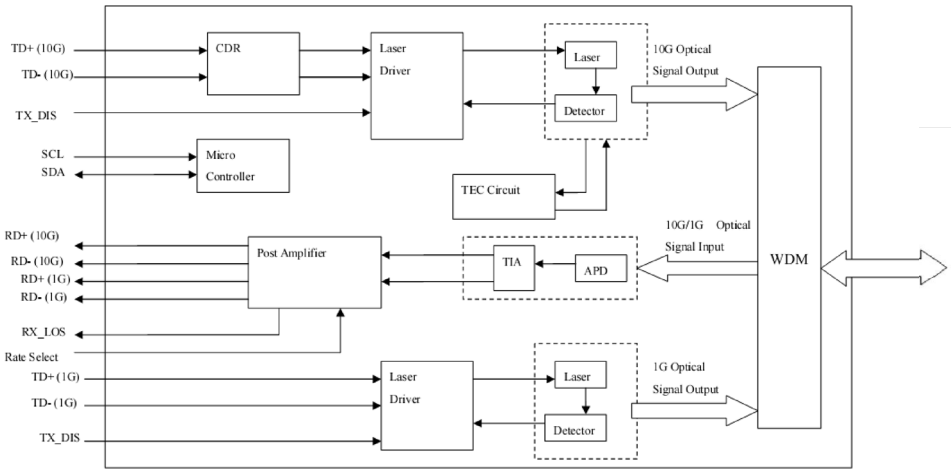

Pin Descriptions

Pin	Symbol	Name/Descriptions	Engagement Order	Notes
1	GND	Ground	1	
2	TX_1G_P	1G Transmitter non-inverted data input	3	6
3	TX_1G_N	1G Transmitter inverted data input	3	6
4	GND	Ground	1	
5	TX_DIS	Transmitter Disable; Turns off the laser output	3	1
6	VCC5	+5V Power Supply (not required)	2	
7	GND	Ground	1	
8	VCC3_TX	TX +3.3V Power Supply	2	
9	VCC3_RX	RX +3.3V Power Supply	2	
10	SCL	2-Wire Serial Interface Clock	3	
11	SDA	2-Wire Serial Interface Data	3	
12	MOD_ABS	Indicates Module is not present. Grounded in the Module	3	
13	Rate Select	RX 10G (high) / 1G (low) Rate Select Input. (not required)	3	2
14	RX_LOS	RX Loss of Signal.	3	3
15	GND	Ground	1	
16	GND	Ground	1	
17	RD_10G_N	10G Receiver inverted data output.	3	4
18	RD_10G_P	10G Receiver non-inverted data output.	3	4
19	GND	Ground	1	
20	RD_1G_N	1G Receiver inverted data output.	3	4
21	RD_1G_P	1G Receiver non-inverted data output.	3	4
22	VCC1	+1.8V Power Supply. (not required)	2	
23	RX_RSSI_TRIG	RX Power Monitor Trigger	3	5
24	NC	Not Connected	3	
25	NC	Not Connected	3	
26	NC	Not Connected	3	
27	GND	Ground	1	
28	TX_10G_N	10G Transmitter inverted data input	3	6
29	TX_10G_P	10G Transmitter non-inverted data input	3	6
30	GND	Ground	1	

Notes:

1. TX Disable input is used to shut down both the 10G laser and 1G laser (if module has 1G transmitter) output per the state table below. It is pulled up within the module with a 4.7 – 10K resistor.

   Low (<0.8V): Transmitter on

   High (>2.0 V): Transmitter Disabled

   Open : Transmitter Disabled

2. Rate Select is used to select the output of receiver. It is pulled down within the module with a 51K

resistor.

Low (<0.8V): 1.25Gbps receiver bandwidth, and shut down 10G receiver

High (>2.0 V): 10.3Gbps receiver bandwidth, and shut down 1G receiver

If this function is not used, both 1.25Gbps and 10.3Gbps receiver will not shutdown.

3. LOS (Loss of signal) is an open collector/drain output which should be pulled up externally with a 4.7 – 10K resistor on the host board to supply <VccT+0.3V or VccR+0.3V. When high, this output indicates the received optical power is below the worst case receiver sensitivity (as defined by the standard in use). Low indicates normal operation. In the low state, the output will be pulled to <0.8V.
4. RD-/+: These are the differential receiver outputs. They are DC coupled in the module.
5. RX_RSSI_TRIG is used to start a RX Power Monitoring. It is pulled high to trigger a A/D sample start. The timing is shown as below:

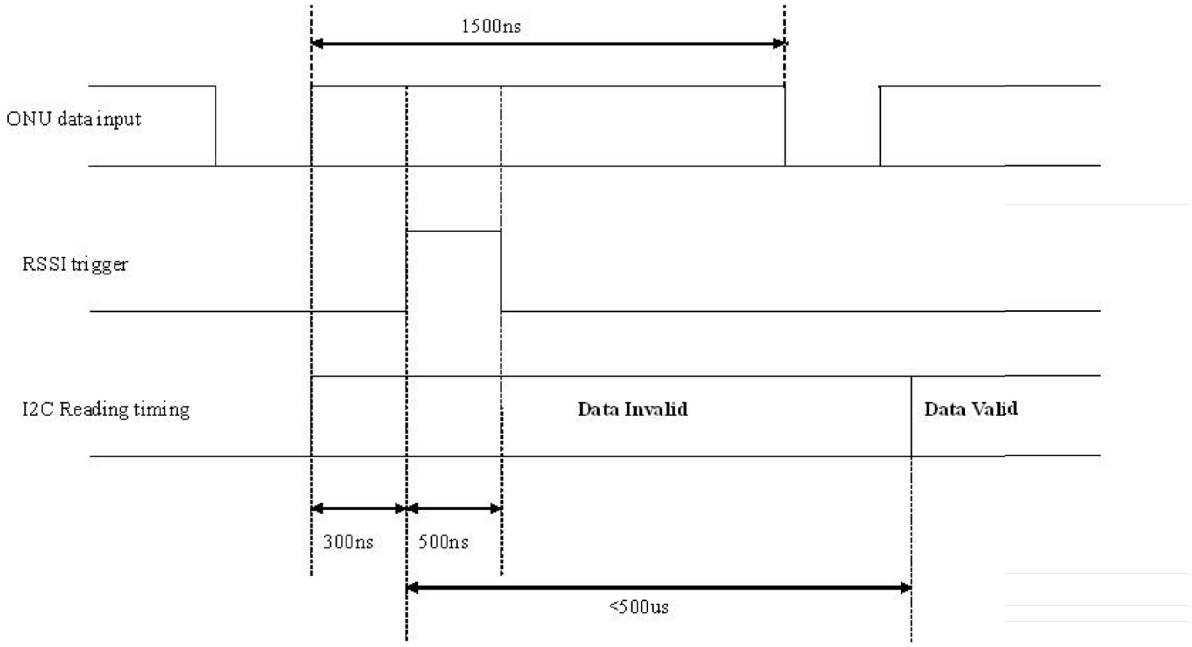

6. TD-/+: These are the differential transmitter inputs. They are AC coupled in the module.

Electrical Ports Definition

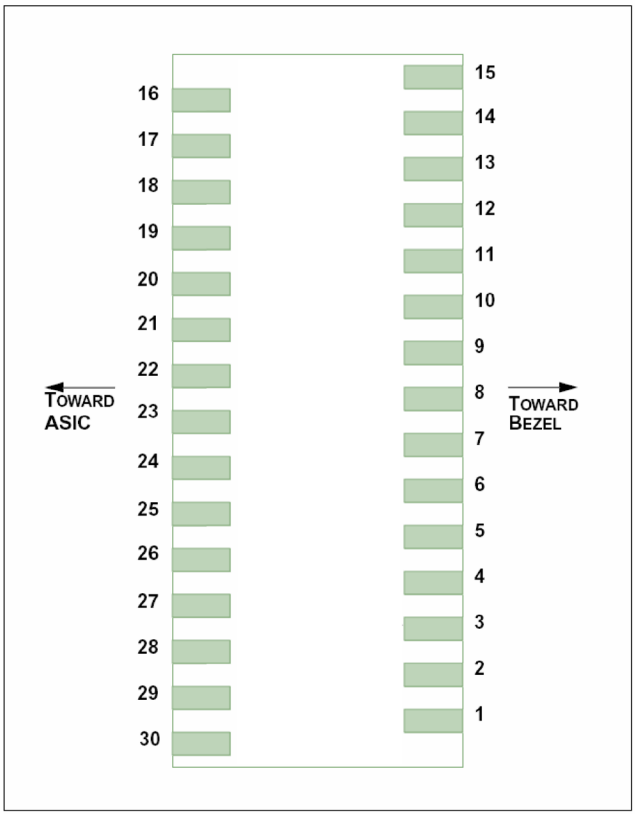

Digital Diagnostic Memory Map

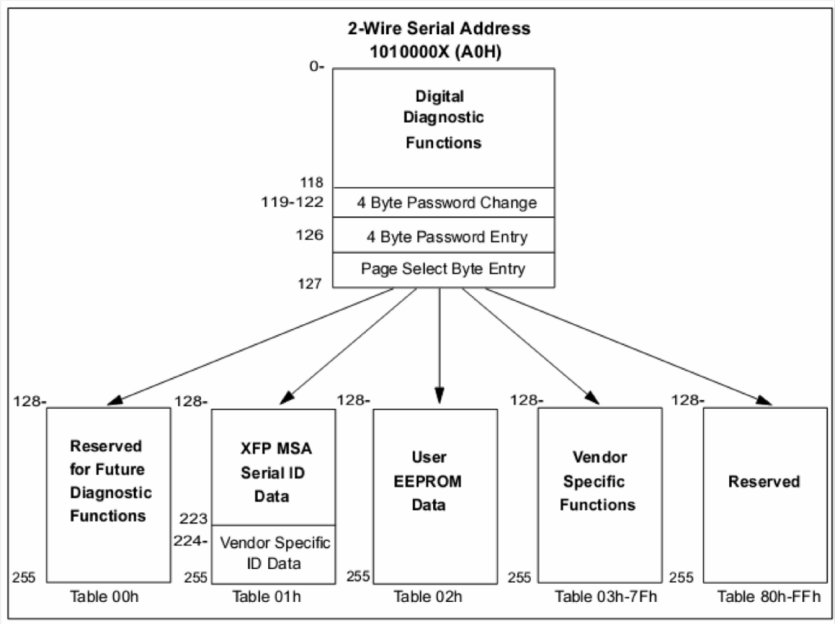

Typical Application Circuit

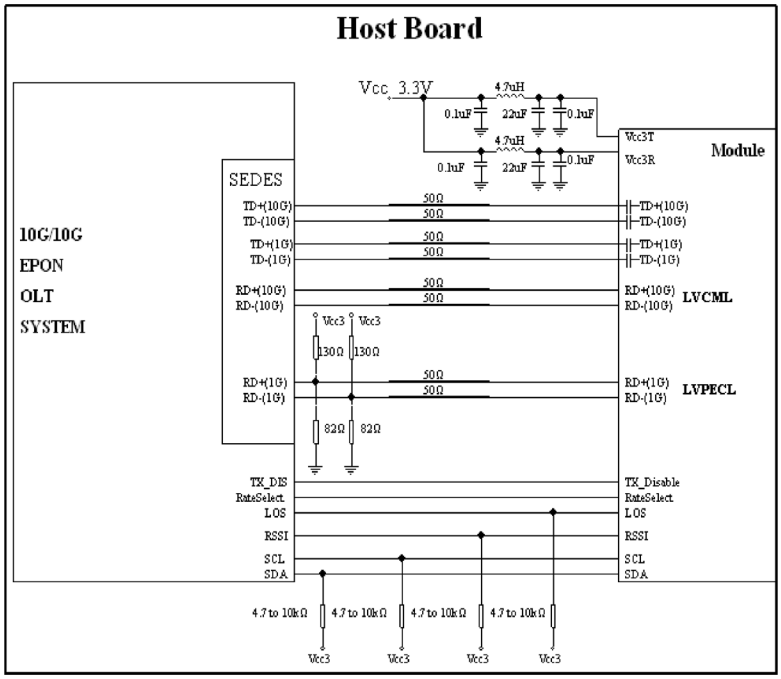

Mechanical Specifications

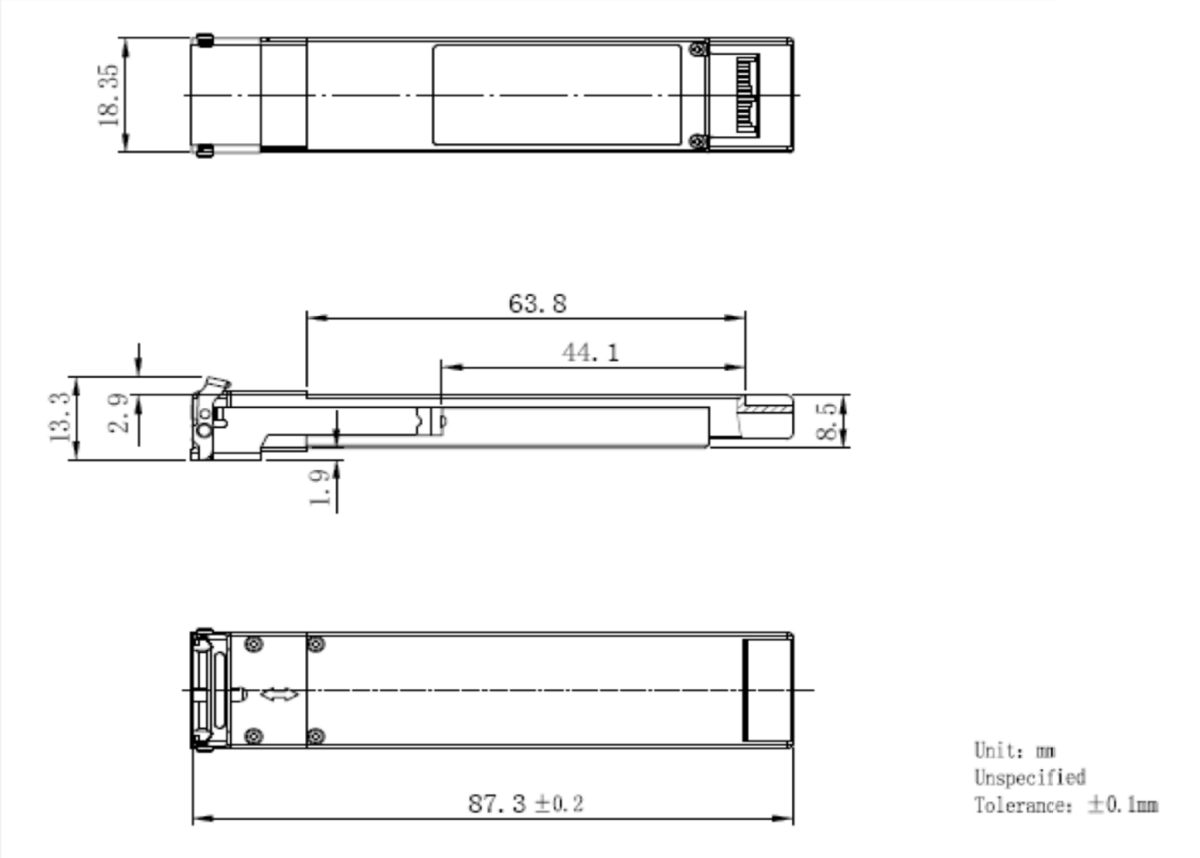

About ProLabs

Our extensive experience comes as standard. For over 20 years ProLabs has delivered optical connectivity solutions that give our customers freedom and choice through our ability to provide seamless interoperability. At the heart of our company is the ability to provide state-of-the-art optical transport and connectivity solutions that are compatible with more than 100 optical switching and transport platforms.

A Complete Portfolio of Network Solutions

ProLabs is focused on innovations in optical transport and connectivity. The combination of our knowledge of optics and networking equipment enables ProLabs to be your single source for optical transport and connectivity solutions from 100Mb to 1.6T while providing innovative solutions that increase network efficiency. We provide the optical connectivity expertise that is compatible with and enhances your switching and transport equipment.

The Trusted Partner

Customer service is our number one value. ProLabs has invested in people, labs and manufacturing capacity to ensure compatible products, and immediate answers to your questions. With Engineering and Manufacturing offices in the U.K. and U.S. augmented by field offices throughout the U.S., U.K. and Asia, ProLabs is able to be our customers best advocate 24 hours a day.

Contact Information

ProLabs US

Email: sales@prolabs.com
Telephone: 952-852-0252

ProLabs UK

Email: salessupport@prolabs.com
Telephone: +44 1285 719 600