T8-3200-C

McData® T8-3200 Compatible TAA 1000Base-SX SFP Transceiver (MMF, 850nm, 550m, LC, DOM)

Features:

- INF-8074 and SFF-8472 Compliance
- Duplex LC Connector
- VCSEL transmitter and PIN receiver
- Multi-mode Fiber
- Commercial Temperature 0 to 70 Celsius
- Hot Pluggable
- Metal with Lower EMI
- Excellent ESD Protection
- RoHS Compliant and Lead Free

Applications:

- 1000Base-SX Ethernet
- 1x Fibre Channel
- Access and Enterprise

Product Description

This McData® T8-3200 compatible SFP transceiver provides 1000Base-SX throughput up to 550m over multi-mode fiber (MMF) using a wavelength of 850nm via an LC connector. It can operate at temperatures between 0 and 70C. Our transceiver is built to meet or exceed OEM specifications and is guaranteed to be 100% compatible with McData®. It has been programmed, uniquely serialized, and tested for data-traffic and application to ensure that it will initialize and perform identically. All of our transceivers comply with Multi-Source Agreement (MSA) standards to provide seamless network integration. Additional product features include Digital Optical Monitoring (DOM) support which allows access to real-time operating parameters. This transceiver is Trade Agreements Act (TAA) compliant. We stand behind the quality of our products and proudly offer a limited lifetime warranty.

ProLabs' transceivers are RoHS compliant and lead-free.

TAA refers to the Trade Agreements Act (19 U.S.C. & 2501-2581), which is intended to foster fair and open international trade. TAA requires that the U.S. Government may acquire only "U.S.-made or designated country end products.")

Rev. 012126

Absolute Maximum Ratings

Parameter	Symbol	Min.	Typ.	Max.	Unit	Notes
Supply Voltage	Vcc	-0.5		4.0	V	
Storage Temperature	Tstg	-40		85	°C	
Case Operating Temperature	Tc	0		70	°C	
Operating Humidity	RH	5		95	%	
Data Rate (Gigabit Ethernet)			1.25		Gbps	
Data Rate (Fibre Channel)			1.063		Gbps	
50/125µm MMF	L			550	m	
Power Consumption				0.87	W	

Electrical Characteristics

Parameter	Symbol	Min.	Typ.	Max.	Unit	Notes
Power Supply Voltage	Vcc	3.13	3.30	3.47	V	
Power Supply Current	Icc			250	mA	
Transmitter						
Input Differential Impedance	RIN		100		Ω	1
Single-Ended Data Input Swing	VIN,pp	250		1200	mV	
Tx_Disable - High		Vcc-1.3		Vcc	V	
Tx_Disable - Low		Vee		Vee+0.8	V	
Tx_Fault - High		Vcc-0.5		Vcc	V	
Tx_Fault - Low		Vee		Vee+0.5	V	
Receiver						
Single-Ended Data Output Swing	VOUT,pp	300	400	800	mV	2
Data Output Rise Time	Tr			175	ps	3
Data Output Fall Time	Tf			175	ps	3
LOS - High		Vcc-0.5		Vcc	V	
LOS - Low		Vee		Vee+0.5	V	

Notes:

1. AC coupled.
2. Into 100Ω differential termination.
3. 20-80%.

Optical Characteristics

Parameter	Symbol	Min.	Typ.	Max.	Unit	Notes
Transmitter						
Average Output Power	PO	-9		-4	dBm	1
Optical Wavelength	λ	830	850	860	nm	
Spectral Width	σ			0.85	nm	
Optical Rise/Fall Time	Tr/Tf			260	ps	2
Total Jitter	TJ			200	ps	
Optical Extinction Ratio	ER	9			dB	
Receiver						
Receiver Sensitivity	RSENS			-18	dBm	3, 4
Maximum Received Power	RX_{MAX}	0			dBm	
Center Wavelength	λC	770		860	nm	
LOS De-Assert	LOSD			-26	dBm	
LOS Assert	LOSA	-40			dBm	
LOS Hysteresis		0.5		5	dB	

Notes:

1. Class 1 laser safety.
2. Unfiltered, 20-80%. Complies with GE and 1xFC eye masks when filtered.
3. Measured with conformance signals defined in FC-PI-2 Rev. 10.0 specifications.
4. Measured with PRBS 2^7-1 at 10^{-10} BER.

Pin Descriptions

Pin	Symbol	Name/Description	Notes
1	VeeT	Transmitter Ground (Common with Receiver Ground).	1
2	Tx_Fault	Transmitter Fault.	
3	Tx_Disable	Transmitter Disable. Laser output disabled on “high” or “open.”	2
4	MOD_DEF(2)	Module Definition 2. Data Line for Serial ID.	3
5	MOD_DEF(1)	Module Definition 1. Clock Line for Serial ID.	3
6	MOD_DEF(0)	Module Definition 0. Grounded within the module.	3
7	Rate Select	No Connection Required.	
8	LOS	Loss of Signal Indication. “Logic 0” indicates normal operation.	4
9	VeeR	Receiver Ground (Common with Transmitter Ground).	1
10	VeeR	Receiver Ground (Common with Transmitter Ground).	1
11	VeeR	Receiver Ground (Common with Transmitter Ground).	1
12	RD-	Receiver Inverted Data Out. AC Coupled.	
13	RD+	Receiver Non-Inverted Data Out. AC Coupled.	
14	VeeR	Receiver Ground (Common with Transmitter Ground).	1
15	VccR	Receiver Power Supply.	
16	VccT	Transmitter Power Supply.	
17	VeeT	Transmitter Ground (Common with Receiver Ground).	1
18	TD+	Transmitter Non-Inverted Data In. AC Coupled.	
19	TD-	Transmitter Inverted Data In. AC Coupled.	
20	VeeT	Transmitter Ground (Common with Receiver Ground).	1

Notes:

1. The circuit ground is internally isolated from the chassis ground.
2. Laser output is disabled on Tx_Disable>2.0V or open, enabled on Tx_Disable<0.8V.
3. Should be pulled up with 4.7kΩ to 10kΩ on the host board to a voltage between 2.0V and 3.6V. MOD_DEF(0) pulls the line low to indicate that the module is plugged in.
4. LOS is an open collector output. Should be pulled up with 4.7kΩ to 10kΩ on the host board to a voltage between 2.0V and 3.6V. “Logic 0” indicates normal operation. “Logic 1” indicates a loss of signal.

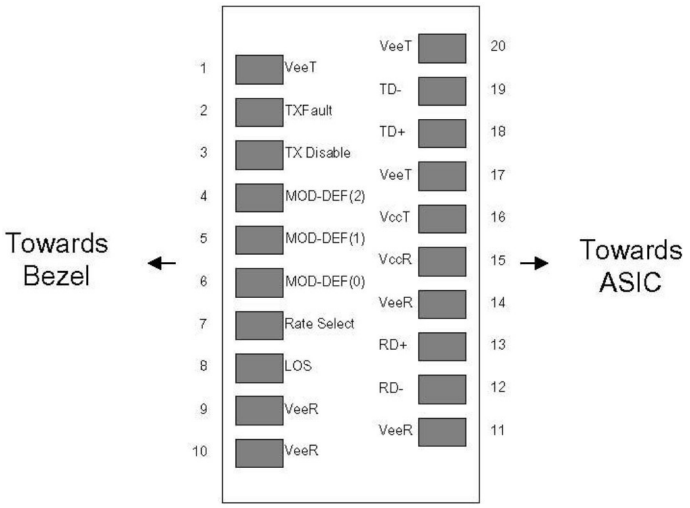

Pin-Out of Connector Block on the Host Board

Recommended Circuit Schematic

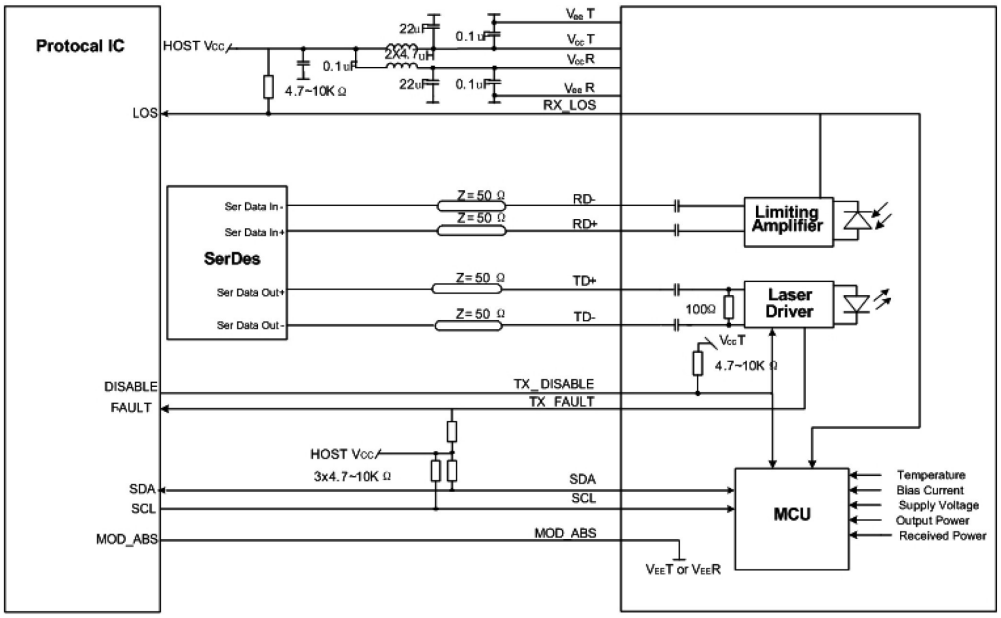

Mechanical Specifications

Small Form Factor Pluggable (SFP) transceivers are compatible with the dimensions defined by the SFP Multi-Sourcing Agreement (MSA).

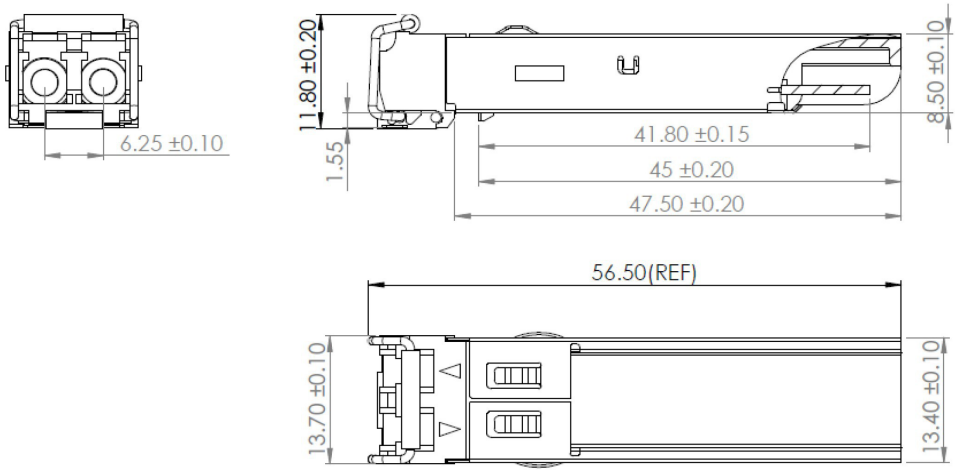

EEPROM Information

EEPROM memory map-specific data field description is as below:

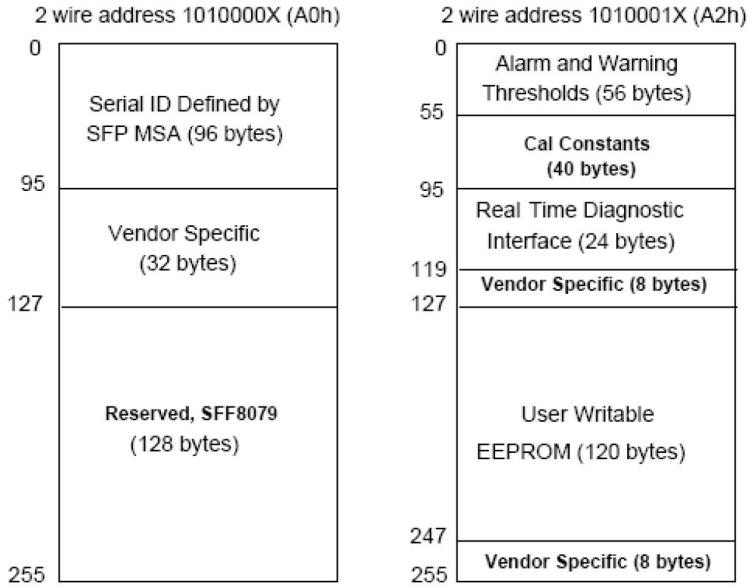

About ProLabs

Our extensive experience comes as standard. For over 20 years ProLabs has delivered optical connectivity solutions that give our customers freedom and choice through our ability to provide seamless interoperability. At the heart of our company is the ability to provide state-of-the-art optical transport and connectivity solutions that are compatible with more than 100 optical switching and transport platforms.

A Complete Portfolio of Network Solutions

ProLabs is focused on innovations in optical transport and connectivity. The combination of our knowledge of optics and networking equipment enables ProLabs to be your single source for optical transport and connectivity solutions from 100Mb to 1.6T while providing innovative solutions that increase network efficiency. We provide the optical connectivity expertise that is compatible with and enhances your switching and transport equipment.

The Trusted Partner

Customer service is our number one value. ProLabs has invested in people, labs and manufacturing capacity to ensure compatible products, and immediate answers to your questions. With Engineering and Manufacturing offices in the U.K. and U.S. augmented by field offices throughout the U.S., U.K. and Asia, ProLabs is able to be our customers best advocate 24 hours a day.

Contact Information

ProLabs US

Email: sales@prolabs.com
Telephone: 952-852-0252

ProLabs UK

Email: salessupport@prolabs.com
Telephone: +44 1285 719 600