SFP-2-5GB-DW53-120-C

MSA Compliant 2.5GBase-DWDM SFP Transceiver 100GHz (SMF, 1535.04nm, 120km, LC, DOM, 0 to 70C)

Features:

- INF-8074 and SFF-8472 Compliance
- Duplex LC Connector
- Single-mode Fiber
- Commercial Temperature 0 to 70 Celsius
- Hot Pluggable
- Metal with Lower EMI
- Excellent ESD Protection
- RoHS Compliant and Lead Free



Applications:

- Ethernet over DWDM
- Access, Metro and Enterprise

Product Description

This MSA compliant SFP transceiver provides 2.5GBase-DWDM throughput up to 120km over single-mode fiber (SMF) using a wavelength of 1535.04nm via an LC connector. It can operate at temperatures between 0 and 70C. All of our transceivers are built to comply with Multi-Source Agreement (MSA) standards and are uniquely serialized and tested for data-traffic and application to ensure seamless network integration. Additional product features include Digital Optical Monitoring (DOM) support which allows access to real-time operating parameters. We stand behind the quality of our products and proudly offer a limited lifetime warranty.

ProLabs' transceivers are RoHS compliant and lead-free.

DWDM Wavelengths

ITU Channel	Frequency (THz)	Center Wavelength (nm)	ITU Channel	Frequency (THz)	Center Wavelength (nm)
16	191.60	1564.68	**42**	194.20	1543.73
17	191.70	1563.86	**43**	194.30	1542.94
18	191.80	1563.05	**44**	194.40	1542.14
19	191.90	1562.23	**45**	194.50	1541.35
20	192.00	1561.42	**46**	194.60	1540.56
21	192.10	1560.61	**47**	194.70	1539.77
22	192.20	1559.79	**48**	194.80	1538.98
23	192.30	1558.98	**49**	194.90	1538.19
24	192.40	1558.17	**50**	195.00	1537.40
25	192.50	1557.36	**51**	195.10	1536.61
26	192.60	1556.55	**52**	195.20	1535.82
27	192.70	1555.75	**53**	195.30	1535.04
28	192.80	1554.94	**54**	195.40	1534.25
29	192.90	1554.13	**55**	195.50	1533.47
30	193.00	1553.33	**56**	195.60	1532.68
31	193.10	1552.52	**57**	195.70	1531.90
32	193.20	1551.72	**58**	195.80	1531.12
33	193.30	1550.92	**59**	195.90	1530.33
34	193.40	1550.12	**60**	196.00	1529.55
35	193.50	1549.32	**61**	196.10	1528.77
36	193.60	1548.51	**62**	196.20	1527.99
37	193.70	1547.72	**63**	196.30	1527.22
38	193.80	1546.92	**64**	196.40	1526.44
39	193.90	1546.12	**65**	196.50	1525.66
40	194.00	1545.32	**66**	196.60	1524.89
41	194.10	1544.53			

Absolute Maximum Ratings

Parameter	Symbol	Min.	Typ.	Max.	Unit	Notes
Data Rate				1.25	Gbps	
Link Budget		32			dB	
Operating Case Temperature	Tc	0		70	℃	
Storage Temperature	Tstg	-40		85	℃	
Maximum Voltage	Vcc	-0.5		3.6	V	
Relative Humidity (Non-Condensing)	RH	5		85	%	

Notes:

1. Exceeding any one of these values may destroy the device permanently.

Electrical Characteristics

Parameter		Symbol	Min.	Typ.	Max.	Unit	Notes
Power Supply Voltage		Vcc	3.14	3.3	3.47	V	
Power Supply Current		Icc			450	mA	
Transmitter							
LVPECL Inputs (Differential)		VIN	400		2000	mVp-p	1
Input Impedance (Differential)		ZIN	85	100	115	Ω	2
Tx_Disable	**Disable**		2		Vcc	V	
	Enable		0		0.8		
Tx_Fault	**Fault**		2		Vcc+0.3	V	
	Normal		0		0.5		
Receiver							
LVPECL Outputs (Differential)		VOUT	370		700	mVp-p	3
Output Impedance (Differential)		ZOUT	85	100	115	Ω	
Tx_Disable Assert Time		t_off			10	us	
Rx_LOS	**High**		2		Vcc+0.3	V	
	Low		0		0.8		
MOD_DEF (0.2)		VOH	2.5			V	4
		VOL	0		0.5		

Notes:

1. LVPECL logic. Internally AC coupled inputs.
2. RIN > 100kΩ @ DC.
3. After internal AC coupling.
4. With serial ID.

Optical Characteristics

Parameter	Symbol	Min.	Typ.	Max.	Unit	Notes
Transmitter						
Center Wavelength	λC	ITU-T DWDM Center Wavelength			nm	
Center Wavelength Variation		-0.1		0.1	nm	
Center Frequency Spacing	Δf		100		GHz	
Spectral Width (-20dB)	Δλ			1	nm	
Side-Mode Suppression Ratio	SMSR	30			dB	
Average Output Power	POUT	0		5	dBm	1
Optical Extinction Ratio	ER	9			dB	
Transmitter Dispersion Penalty	TDP			3.0	dB	
Average Power of Off Transmitter	Poff			-45	dBm	
Rise/Fall Time (20-80%)	Tr/Tf			260	ps	
Output Optical Eye	Compliant with IEEE 802.3					2
Receiver						
Center Wavelength	λC	1528		1620	nm	
Receiver Sensitivity	PSEN			-32	dBm	3, 4
Receiver Overload	POVER	-10			dBm	4
LOS De-Assert	LOSD			-33	dBm	
LOS Assert	LOSA	-45			dBm	
LOS Hysteresis	LOSH	0.5		6	dB	

Notes:

1. Output power is measured by coupling into a 9/125µm single-mode fiber.
2. Filtered, measured with a PRBS 2^7-1 test pattern @1250Mbps.
3. Minimum average optical power, measured at BER less than $1E^{-12}$ with 2^7-1 PRBS and ER=9dB.
4. Measured with receiving wavelength in the range of 1524nm to 1620nm.

Pin Descriptions

Pin	Symbol	Name/Description	Plug Sequence	Notes
1	VeeT	Transmitter Ground.	1	5
2	Tx_Fault	Transmitter Fault Indication.	3	1
3	Tx_Disable	Transmitter Disable. Module disables on “high” or “open.”	3	2
4	MOD_DEF2	Module Definition 2. 2-wire serial ID interface.	3	3
5	MOD_DEF1	Module Definition 1. 2-wire serial ID interface.	3	3
6	MOD_DEF0	Module Definition 0. Grounded within the module.	3	3
7	Rate Select	Not Connected. Function not available.	3	
8	LOS	Loss of Signal.	3	4
9	VeeR	Receiver Ground.	1	
10	VeeR	Receiver Ground.	1	5
11	VeeR	Receiver Ground.	1	5
12	RD-	Inverted Received Data Out.	3	6
13	RD+	Received Data Out.	3	6
14	VeeR	Receiver Ground.	1	5
15	VccR	3.3 ± 5% Receiver Power.	2	7
16	VccT	3.3 ± 5% Transmitter Power.	2	7
17	VeeT	Transmitter Ground.	1	5
18	TD+	Transmit Data In.	3	8
19	TD-	Inverted Transmit Data In.	3	8
20	VeeT	Transmitter Ground.	1	5

Notes

1. Tx_Fault is an open collector/drain output that should be pulled up with a 4.7kΩ to 10kΩ resistor on the host board. When “high,” the output indicates a laser fault of some kind. “Low” indicates normal operation. In the “low” state, the output will be pulled to <0.8V.
2. Tx_Disable is an input that is used to shut down the transmitter optical output. It is pulled up within the module with a 4.7kΩ to 10kΩ resistor. Its states are：
   Low (0V-0.8V): Transmitter On
   (>0.8V, <2.0V): Undefined
   High (2.0V–3.465V): Transmitter Disabled
   Open: Transmitter Disabled.
3. MOD_DEF0, 1, & 2. These are the module definition pins. They should be pulled up with a 4.7kΩ to 10kΩ resistor on the host board.
   MOD_DEF0 is grounded by the module to indicate that the module is present.
   MOD_DEF1 is the clock line of the 2-wire serial interface for serial ID.
   MOD_DEF2 is the data line of the 2-wire serial interface for serial ID.
4. LOS (Loss of Signal) is an open collector/drain output that should be pulled up with a 4.7kΩ to 10kΩ resistor. When “high,” this output indicates the received optical power is below the worst-case receiver sensitivity (as defined by the standard in use). “Low” indicates normal operation in the “low” state. The output will be pulled to <0.8V.
5. VeeR and VeeT may be internally connected within the SFP module.
6. RD-/+. These are the differential receiver outputs. They are AC-coupled, 100Ω differential lines that should be terminated with 100Ω (differential) at the user SERDES.

7. VccR and VccT are the receiver and transmitter power supplies. They are defined as 3.3V ± 5% at the SFP connector pin. VccR and VccT may be internally connected within the SFP transceiver.
8. TD-/+. These are the differential transmitter inputs. They are AC-coupled, differential lines with 100Ω differential termination inside the module.

Pin-Out Details

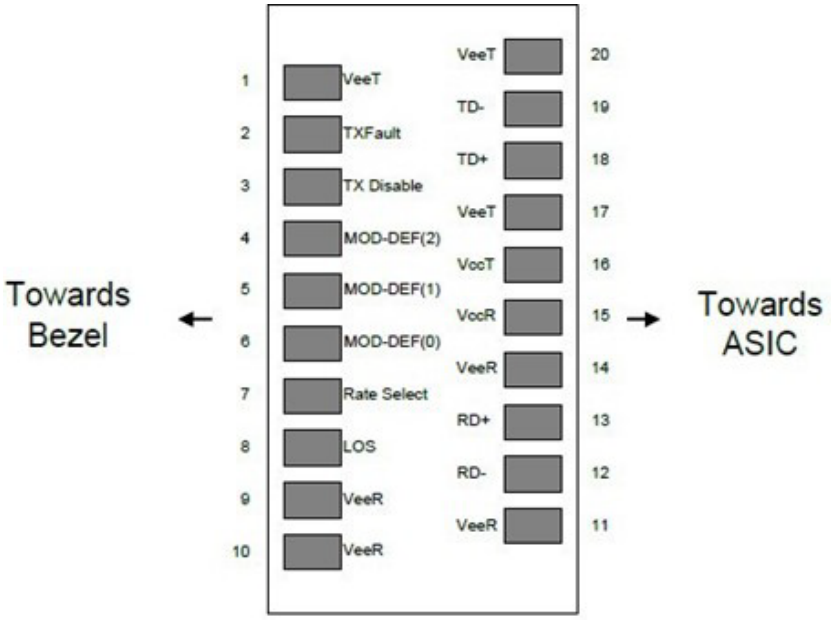

Recommended Circuit Schematic

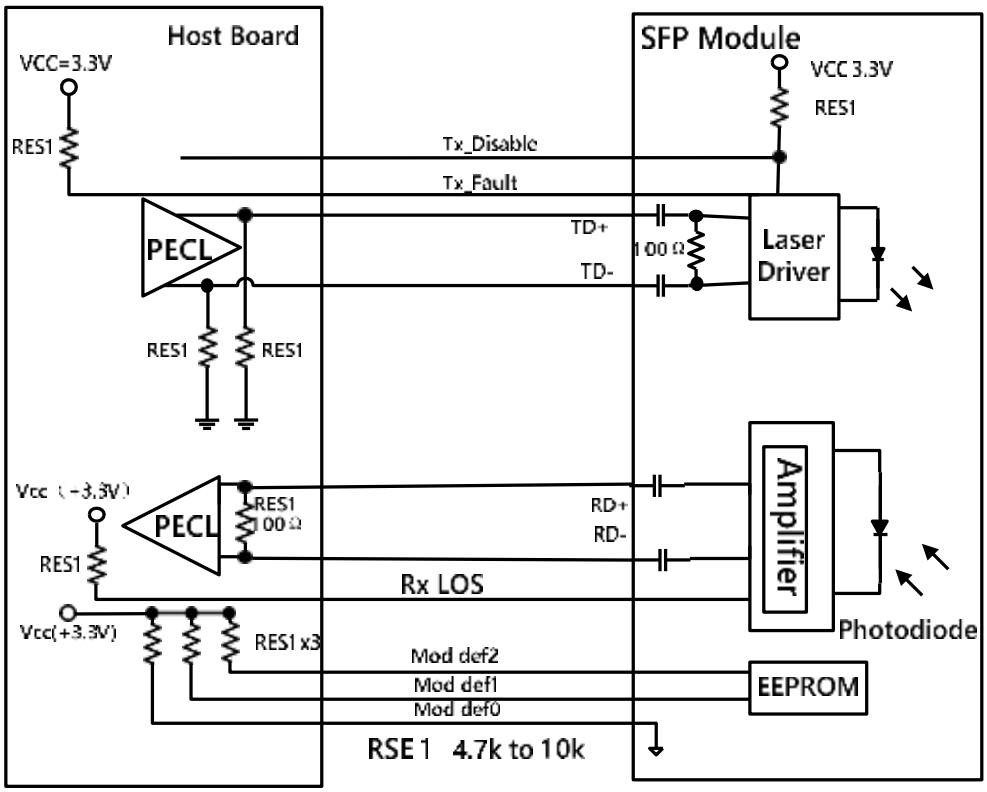

Mechanical Specifications

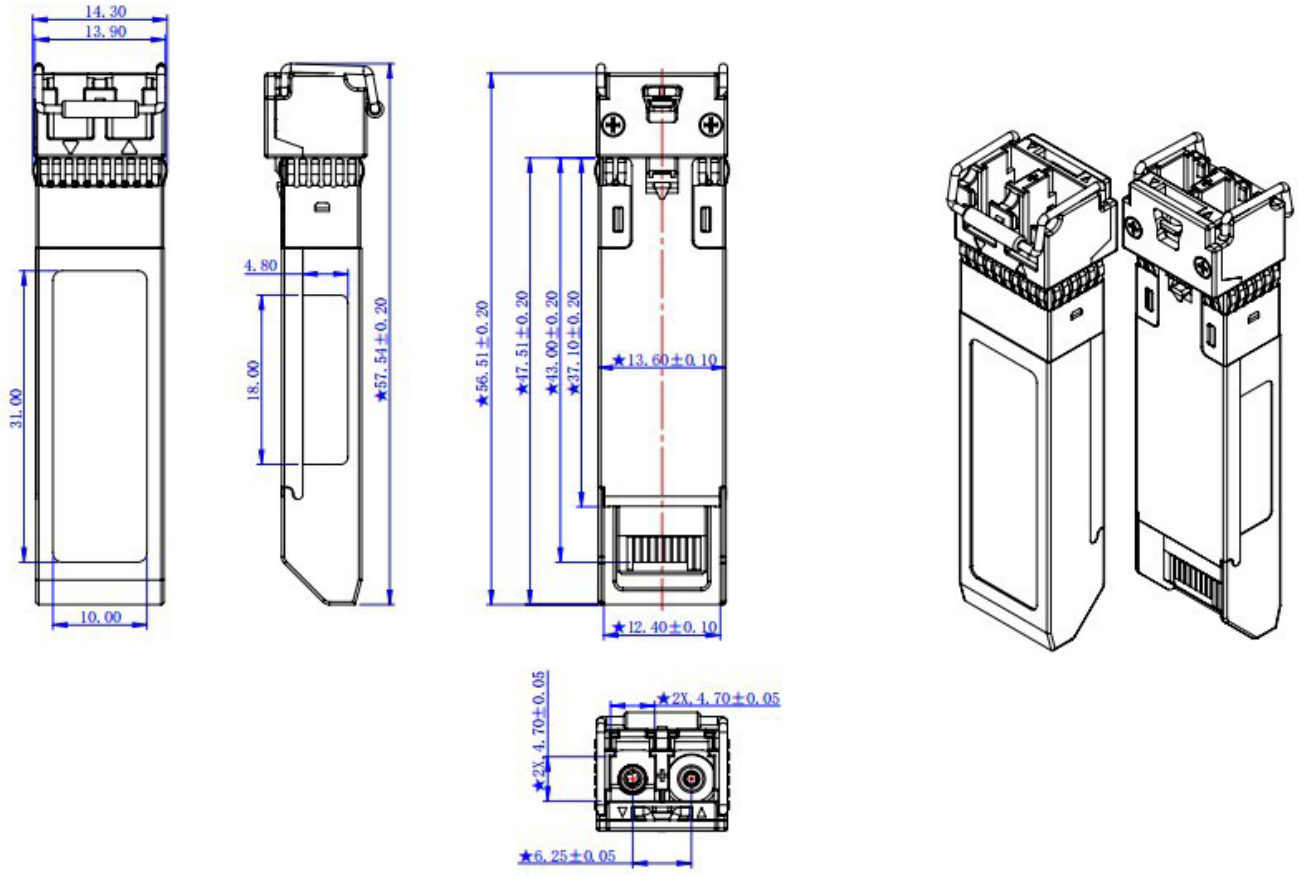

About ProLabs

Our extensive experience comes as standard. For over 20 years ProLabs has delivered optical connectivity solutions that give our customers freedom and choice through our ability to provide seamless interoperability. At the heart of our company is the ability to provide state-of-the-art optical transport and connectivity solutions that are compatible with more than 100 optical switching and transport platforms.

A Complete Portfolio of Network Solutions

ProLabs is focused on innovations in optical transport and connectivity. The combination of our knowledge of optics and networking equipment enables ProLabs to be your single source for optical transport and connectivity solutions from 100Mb to 1.6T while providing innovative solutions that increase network efficiency. We provide the optical connectivity expertise that is compatible with and enhances your switching and transport equipment.

The Trusted Partner

Customer service is our number one value. ProLabs has invested in people, labs and manufacturing capacity to ensure compatible products, and immediate answers to your questions. With Engineering and Manufacturing offices in the U.K. and U.S. augmented by field offices throughout the U.S., U.K. and Asia, ProLabs is able to be our customers best advocate 24 hours a day.



Contact Information

ProLabs US

Email: sales@prolabs.com
Telephone: 952-852-0252

ProLabs UK

Email: salessupport@prolabs.com
Telephone: +44 1285 719 600