**SFP-25G-SR-AR-C**

Arista Networks® SFP-25G-SR Compatible TAA 25GBase-SR SFP28 Transceiver (MMF, 850nm, 100m, LC, DOM)

**Features:**

- SFF-8402 and SFF-8472 Compliance
- Duplex LC Connector
- Multi-mode Fiber
- Commercial Temperature 0 to 70 Celsius
- Hot Pluggable
- Metal with Lower EMI
- Excellent ESD Protection
- RoHS Compliant and Lead Free

**Applications:**

- 25GBase Ethernet
- Access and Enterprise

**Product Description**

This Arista Networks® SFP-25G-SR compatible SFP28 transceiver provides 25GBase-SR throughput up to 100m over multi-mode fiber (MMF) using a wavelength of 850nm via an LC connector. It can operate at temperatures between 0 and 70C. Our transceiver is built to meet or exceed OEM specifications and is guaranteed to be 100% compatible with Arista Networks®. It has been programmed, uniquely serialized, and tested for data-traffic and application to ensure that it will initialize and perform identically. All of our transceivers comply with Multi-Source Agreement (MSA) standards to provide seamless network integration. Additional product features include Digital Optical Monitoring (DOM) support which allows access to real-time operating parameters. This transceiver is Trade Agreements Act (TAA) compliant. We stand behind the quality of our products and proudly offer a limited lifetime warranty.

ProLabs' transceivers are RoHS compliant and lead-free.

TAA refers to the Trade Agreements Act (19 U.S.C. & 2501-2581), which is intended to foster fair and open international trade. TAA requires that the U.S. Government may acquire only "U.S.-made or designated country end products.")

**Rev. 012126**

## Absolute Maximum Ratings

| Parameter | Symbol | Min. | Typ. | Max | Unit |
|---|---|---|---|---|---|
| **Storage Temperature** | Ts | -40 | | 85 | ˚C |
| **Relative Humidity** | RH | 5 | | 95 | % |
| **Supply Voltage** | Vcc | -0.5 | | 4.0 | V |
| **Operating Case Temperature** | Tc | 0 | 25 | 70 | ˚C |

## Electrical Characteristics

| Parameter | | Symbol | Min | Typ | Max | Unit | Notes |
|---|---|---|---|---|---|---|---|
| **Supply Voltage** | | Vcc | 3.135 | 3.3 | 3.465 | V | |
| **Data Rate** | | | | 25.78 | | GB/s | |
| **Module Supply Current** | | Icc | | | 290 | mA | |
| **Power Dissipation** | | $P_D$ | | | 1000 | mW | |
| **Transmitter** | | | | | | | |
| **Input Differential Impedance** | | $Z_{IN}$ | | 100 | | Ω | |
| **Differential Data Input Swing** | | $V_{IN, P-P}$ | 180 | | 700 | $mV_{P-P}$ | |
| **TX_FAULT** | **Transmitter Fault** | $V_{OH}$ | 2.0 | | $V_{CC}$ | V | TX_FAULT |
| | **Normal Operation** | $V_{OL}$ | 0 | | 0.8 | V | |
| **TX_DISABLE** | **Transmitter Disable** | $V_{IH}$ | 2.0 | | $V_{CC}$ | V | TX_DISABLE |
| | **Transmitter Enable** | $V_{IL}$ | 0 | | 0.8 | V | |
| **Receiver** | | | | | | | |
| **Output Differential Impedance** | | $Z_O$ | | 100 | | Ω | |
| **Differential Data Output Swing** | | $V_{OUT, P-P}$ | 300 | | 850 | $mV_{P-P}$ | 1 |
| **Data Output Rinse Time, Fall Time** | | tr, tf | | 30 | | Ps | 2 |
| **Rx_LOS** | **Loss of Signal (LOS)** | $V_{OH}$ | 2.0 | | VCC | V | RX_LOS |
| | **Normal Operation** | $V_{OL}$ | 0 | | 0.8 | V | |

**Notes:**

1. Internally AC coupled, but requires a external 100Ω differential load termination.
2. 20-80%
3. LOS is an open collector output. Should be pulled up with 4.7Ω on the host board.

## Optical Characteristics

| Parameter | Symbol | Min | Typ | Max | Unit | Notes |
|---|---|---|---|---|---|---|
| **Transmitter** | | | | | | |
| **Launch Optical Power** | Po | -7.6 | | +2.4 | dBm | 1 |
| **Extinction Ratio** | ER | 2 | | | dB | |
| **Center Wavelength Range** | λc | 840 | 850 | 860 | nm | |
| **Transmitter Dispersion Penalty @25.78GB/s** | TWDP | | | 5 | dB | |
| **Spectral Width (RMS) @25.78Gb/s** | Δλ | | | 0.6 | nm | |
| **Optical Return Loss Tolerance** | ORLT | | | 12 | dB | |
| **Pout @TX-Disable Asserted** | $P_{OFF}$ | | | -30 | dBm | 1 |
| **Receiver** | | | | | | |
| **Center Wavelength** | λc | 840 | | 860 | nm | |
| **Receiver Sensitivity (P avg)** | S | | | -11 | dBm | 2 |
| **Receiver Overload (P avg)** | $P_{OL}$ | 2.5 | | | dBm | |
| **Optical Return Loss** | ORL | 12 | | | dB | |
| **LOS De-Assert** | $LOS_D$ | | | -12 | dBm | |
| **LOS Assert** | $LOS_A$ | -30 | | | dBm | |
| **LOS Hysteresis** | | 0.5 | | | dB | |

**Notes:**

1. 50/125µm fiber with NA = 0.2, 62.5/125µm fiber with NA = 0.275.
2. Measured with PRBS 231-1 at 10-4 BER @25.78Gb/s.

**Pin Descriptions**

| Pin | Symbol | Name/Descriptions | Ref. |
|---|---|---|---|
| **1** | VeeT | Transmitter Ground | 1 |
| **2** | TX Fault | Transmitter Fault (LVTTL-O) - High indicates a fault condition | 2 |
| **3** | TX Disable | Transmitter Disable (LVTTL-I) – High or open disables the transmitter | 3 |
| **4** | SDA | Two wire serial interface Data Line (LVCMOS-I/O) (MOD-DEF2) | 4 |
| **5** | SCL | Two wire serial interface Clock Line (LVCMOS-I/O) (MOD-DEF1) | 4 |
| **6** | MOD_ABS | Module Absent (Output), connected to VeeT or VeeR in the module | 5 |
| **7** | RS0 | Rate Select 0 – Not used, Presents high input impedance | 6 |
| **8** | RX_LOS | Receiver Loss of Signal (LVTTL-O) | 2 |
| **9** | RS1 | Rate Select 1 – Not used, Presents high input impedance | 6 |
| **10** | VeeR | Receiver Ground | 1 |
| **11** | VeeR | Receiver Ground | 1 |
| **12** | RD- | Inverse Received Data out (CML-O), AC Coupled | |
| **13** | RD+ | Received Data out (CML-O), AC Coupled | |
| **14** | VeeR | Receiver Ground | |
| **15** | VccR | Receiver Power - +3.3V | |
| **16** | VccT | Transmitter Power - +3.3 V | |
| **17** | VeeT | Transmitter Ground | 1 |
| **18** | TD+ | Transmitter Data In (CML-I), AC Coupled | |
| **19** | TD- | Inverse Transmitter Data In (CML-I), AC Coupled | |
| **20** | VeeT | Transmitter Ground | 1 |

**Notes:**

1. The module signal grounds are isolated from the module case.
2. This is an open collector/drain output that on the hostboad requires a 4.7KΩ to 10KΩ pull-up resistor to VccHost.
3. This input is internally biased high with a 4.7KΩ to 10KΩ pull-up resistor to VccT.
4. Two-Wire Serial interface clock and data lines require an external pull-up resistor dependent on the capacitance load.
5. This is a ground return that on the host board requires a 4.7KΩ to 10KΩ pull-up resistor to VccHost.
6. Rate select can also be set through the 2-wire bus in accordance with SFF-8472 v. 10.2, Rx Rate Select is set at Bit 3, Byte 110.
   Address A2h. Tx Rate Select is set at Bit 3, Byte 118, Address A2h.
   Note: writing a “1” selects maximum bandwidth operation. Rate select is the logic OR of the input state of Rate Select Pin and 2-wire bus.

**Host PCB SFP+ pad assignment top view**

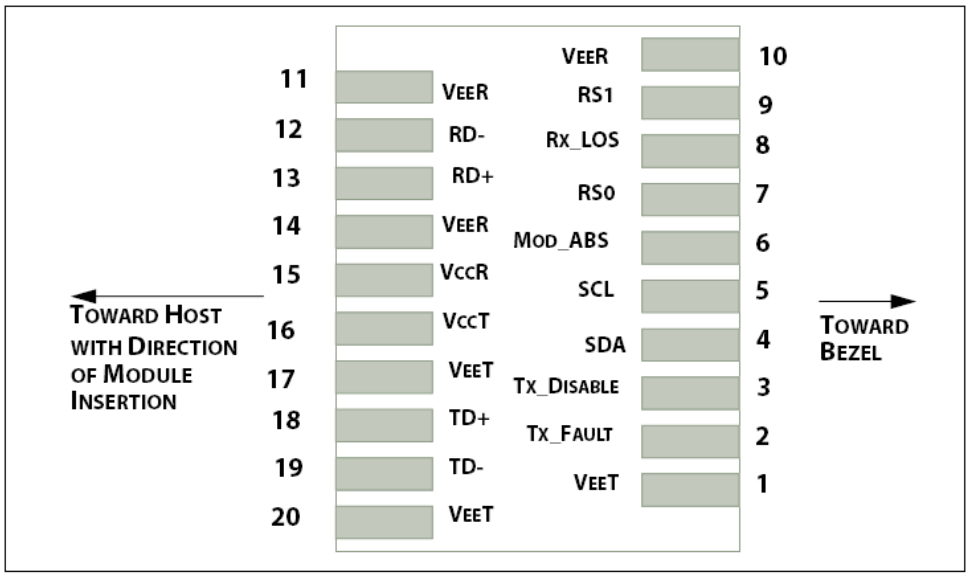


**Recommended Host Board Power Supply Filter Network**

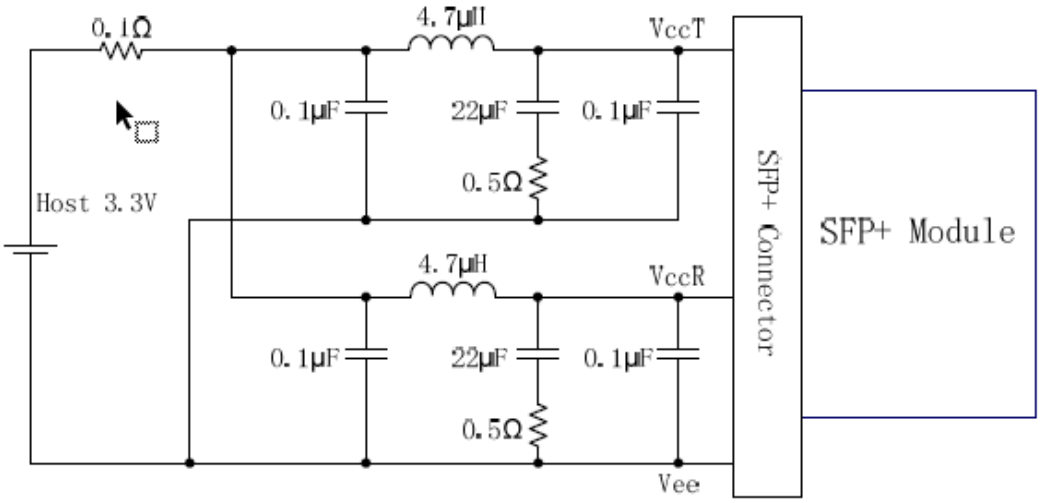

## Recommended Application Interface Block Diagram

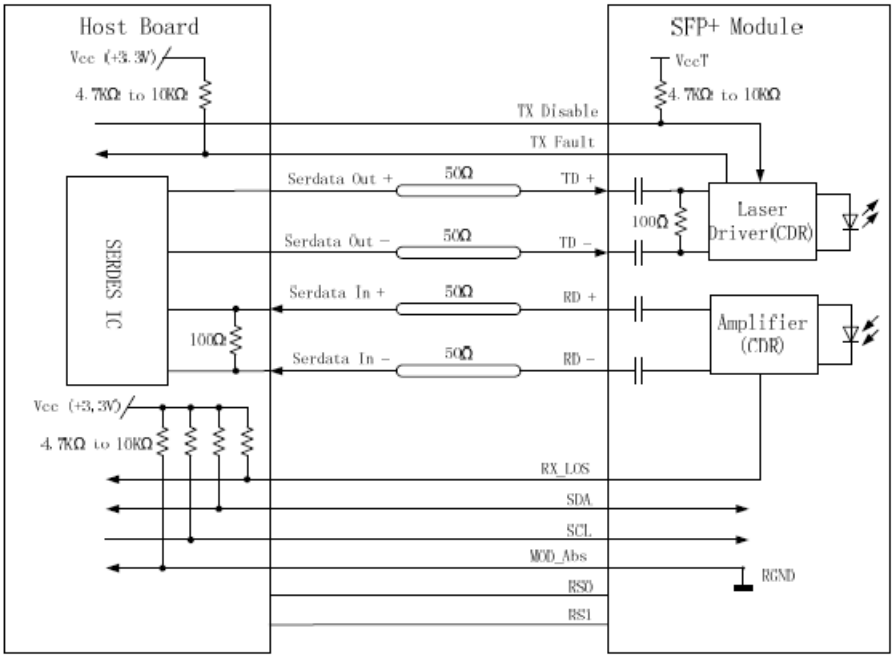


## Mechanical Specifications

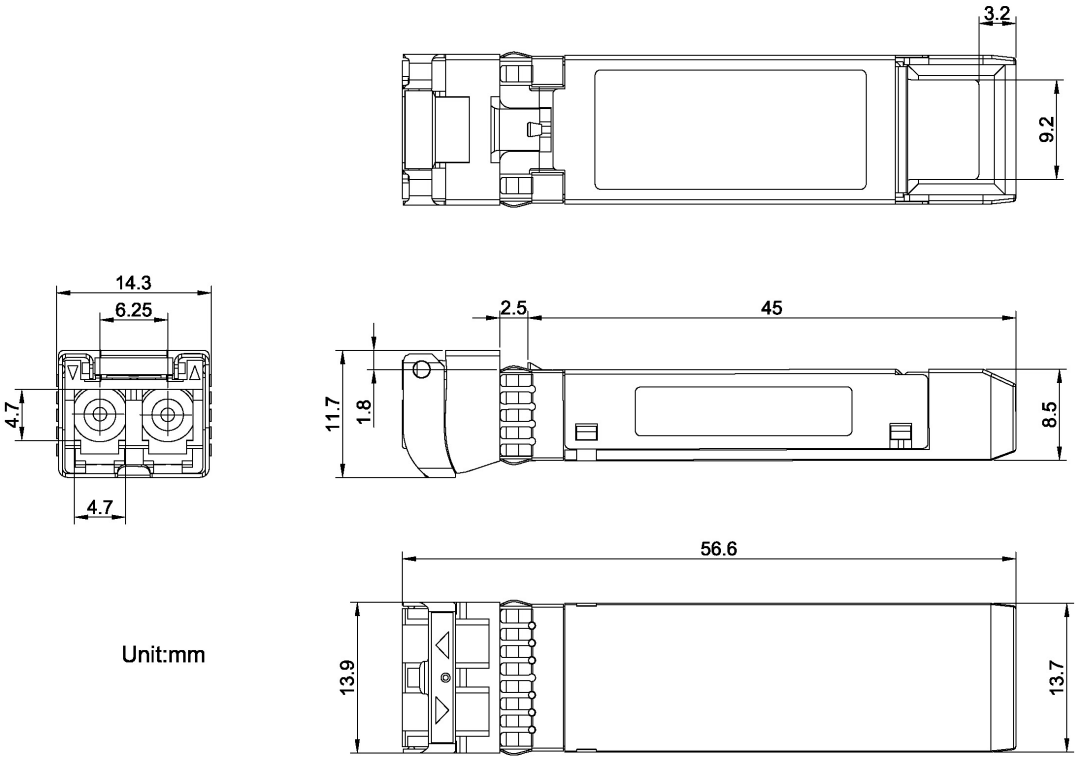

**About ProLabs**

Our extensive experience comes as standard. For over 20 years ProLabs has delivered optical connectivity solutions that give our customers freedom and choice through our ability to provide seamless interoperability. At the heart of our company is the ability to provide state-of-the-art optical transport and connectivity solutions that are compatible with more than 100 optical switching and transport platforms.

**A Complete Portfolio of Network Solutions**

ProLabs is focused on innovations in optical transport and connectivity. The combination of our knowledge of optics and networking equipment enables ProLabs to be your single source for optical transport and connectivity solutions from 100Mb to 1.6T while providing innovative solutions that increase network efficiency. We provide the optical connectivity expertise that is compatible with and enhances your switching and transport equipment.

**The Trusted Partner**

Customer service is our number one value. ProLabs has invested in people, labs and manufacturing capacity to ensure compatible products, and immediate answers to your questions. With Engineering and Manufacturing offices in the U.K. and U.S. augmented by field offices throughout the U.S., U.K. and Asia, ProLabs is able to be our customers best advocate 24 hours a day.

**Contact Information**

ProLabs US

Email: sales@prolabs.com
Telephone: 952-852-0252

ProLabs UK

Email: salessupport@prolabs.com
Telephone: +44 1285 719 600