SFP-1M-BX-D-550-C

MSA Compliant 100Base-BX SFP Transceiver (MMF, 1550nmTx/1310nmRx, 550m, LC, DOM)

Features:

- INF-8074 and SFF-8472 Compliance
- Simplex LC Connector
- Single-mode Fiber
- Commercial Temperature 0 to 70 Celsius
- Hot Pluggable
- Metal with Lower EMI
- Excellent ESD Protection
- RoHS Compliant and Lead Free

Applications:

- 100Base

Product Description

This MSA compliant SFP transceiver provides 100Base-BX throughput up to 550m over multi-mode fiber (MMF) using a wavelength of 1550nmTx/1310nmRx via a LC connector. This bidirectional unit must be used with another transceiver or network appliance of complementing wavelengths. It is built to MSA standards and is uniquely serialized and data-traffic and application tested to ensure that they will integrate into your network seamlessly. Digital optical monitoring (DOM) support is also present to allow access to real-time operating parameters. We stand behind the quality of our products and proudly offer a limited lifetime warranty.

ProLabs' transceivers are RoHS compliant and lead-free.

Absolute Maximum Ratings

Parameter	Symbol	Min.	Max.	Unit
Maximum Supply Voltage	Vcc	-0.5	4.0	V
Storage Temperature	TS	-40	85	°C
Operating Case Temperature	Tc	0	70	°C
Operating Humidity	RH	5	85	%
Receiver Power	R_{MAX}		-3	dBm
Maximum Bitrate	B_{max}		1.25	Gbps

Electrical Characteristics (TOP=25°C, Vcc=3.3Volts)

Parameter	Symbol	Min.	Typ.	Max.	Unit	Notes
Power Supply Voltage	Vcc	3.15	3.30	3.43	V	
Power Supply Current	Icc			303	mA	
Power Consumption	P_{DISS}			1	W	
Transmitter						
Differential data input swing	Vin,pp	120		850	mV	
Input differential impedance	Zin	80	100	120	Ω	
Receiver						
Differential data output swing	Vout, pp	300		850	mV	
Output differential impedance	Zin	80	100	120	Ω	

Optical Characteristics

Parameter	Symbol	Min.	Typ.	Max.	Unit	Notes
Transmitter						
Optical Power (average)	P_{AVE}	-9		-3	dBm	1
Optical Extinction Ratio	ER	9			dB	
Optical Wavelength	Tλ	1530	1550	1570	nm	
Insertion loss	IL		0.7			
Receiver						
Receiver Sensitivity (average)	R_{AVE}			-19.5	dBm	2
Receiver overload	P_{max}	-3			dBm	3
Receiver wavelength	Rλ	1260		1360	nm	

Notes:

1. Coupled into a Single-mode fibre
2. Average power, back-to-back, @1.25Gbps, BER 1E-12, PRBS 2^{31}-1.
3. Exceeding the Receiver overload can physically damage the module. Please use appropriate attenuation.

Pin Descriptions

Pin	Symbol	Name/Descriptions	Ref.
1	VeeT	Transmitter Ground (Common with Receiver Ground).	1
2	TX Fault	Transmitter Fault. LVTTL-O	2
3	TX Disable	Transmitter Disable. Laser output disabled on high or open. LVTT-I.	3
4	SDA	2-Wire Serial Interface Data Line (Same as MOD-DEF2 in INF-8074i). LVTTL-I/O.	
5	SCL	2-Wire Serial Interface Data Line (Same as MOD-DEF2 in INF-8074i). LVTTL-I.	
6	MOD_ABS	Module Absent, Connect to VeeT or VeeR in Module.	4
7	RS0	Rate Select 0. Not used	5
8	LOS	Loss of Signal indication. Logic 0 indicates normal operation. LVTTL-O.	2
9	RS1	Rate Select 1. Not used	5
10	VeeR	Receiver Ground (Common with Transmitter Ground).	1
11	VeeR	Receiver Ground (Common with Transmitter Ground).	1
12	RD-	Receiver Inverted DATA out. AC Coupled. CML-O.	
13	RD+	Receiver Non-inverted DATA out. AC Coupled. CML-O.	
14	VeeR	Receiver Ground (Common with Transmitter Ground).	1
15	VccR	Receiver Power Supply.	
16	VccT	Transmitter Power Supply.	
17	VeeT	Transmitter Ground (Common with Receiver Ground).	1
18	TD+	Transmitter Non-Inverted DATA in. AC Coupled. CML-I.	
19	TD-	Transmitter Inverted DATA in. AC Coupled. CML-O.	
20	VeeT	Transmitter Ground (Common with Receiver Ground).	1

Notes:

1. The module signal ground contacts, VeeR and VeeT, should be isolated from the module case.
2. This contact is an open collector/drain output and should be pulled up to the Vcc_Host with resister in the range 4.7KΩ to 10KΩ. Pull ups can be connected to one or several power supplies, however the host board design shall ensure that no module contract has voltage exceeding module VccT/R +0.5.V.
3. Tx_Disable is an input contact with a 4.7KΩ to 10KΩ pull-up resistor to VccT inside module.
4. Mod_ABS is connected to VeeT or VeeR in the SFP+ module. The host may pull the contract up to Vcc_Host with a resistor in the range from 4.7KΩ to 10KΩ. Mod_ABS is asserted “High” when the SFP+ module is physically absent from a host slot.
5. Internally pulled down per SFF-8431

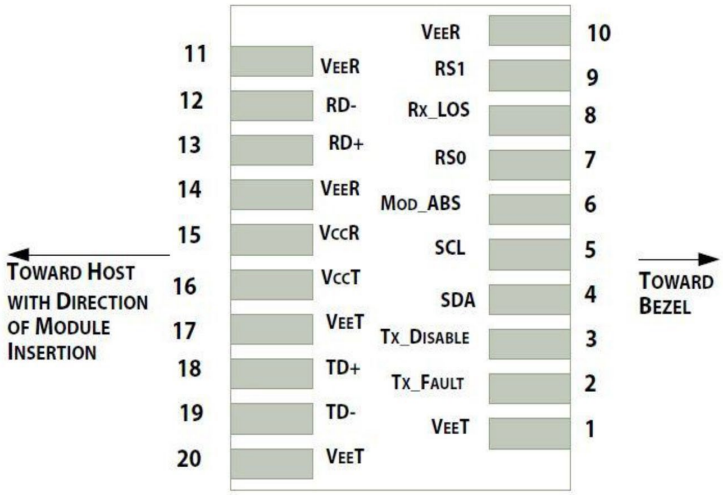

Pin-out of connector Block on Host board

Recommended Circuit Schematic

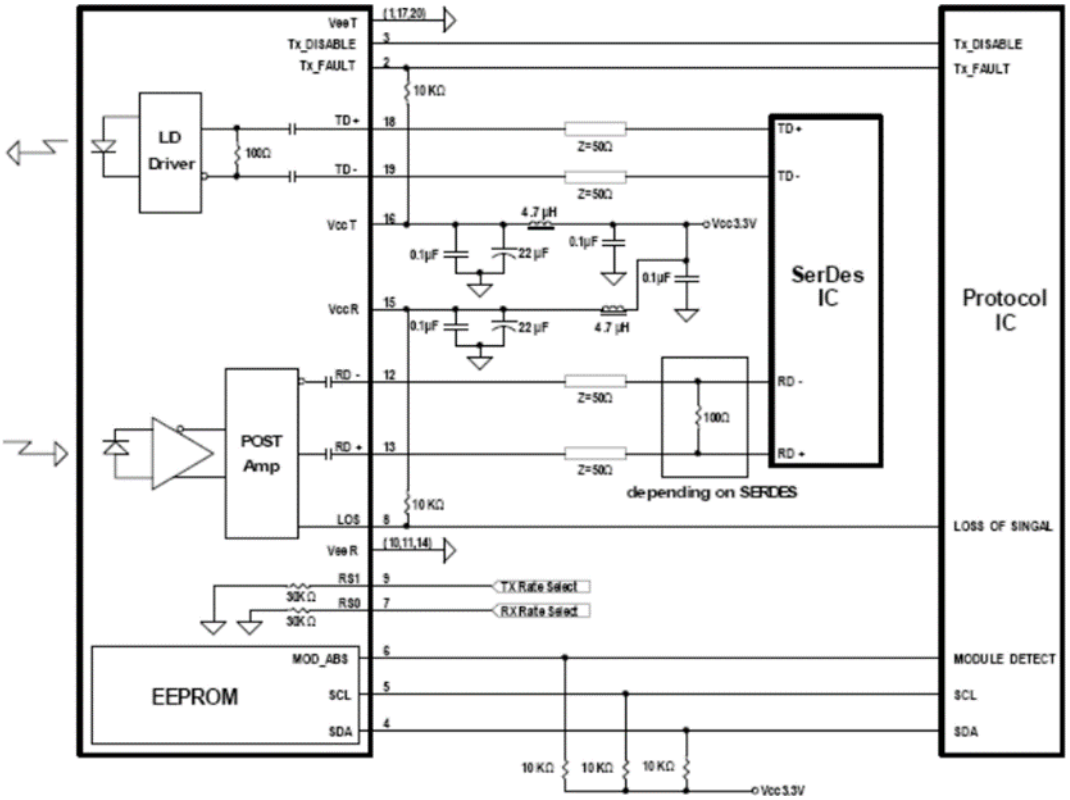

Mechanical Specifications

Small Form Factor Pluggable (SFP) transceivers are compatible with the dimensions defined by the SFP Multi-Sourcing Agreement (MSA).

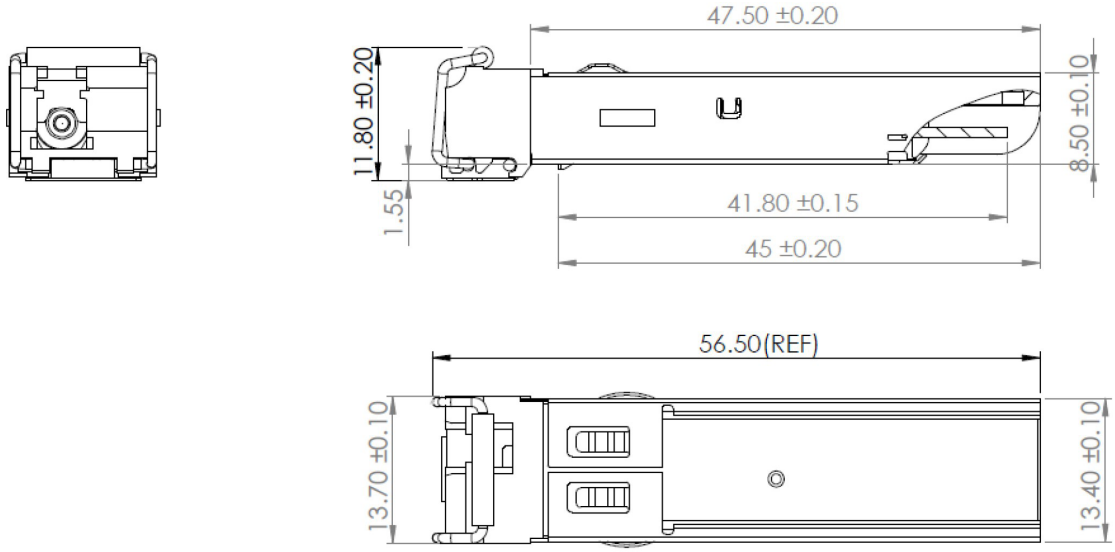

EEPROM Information

EEPROM memory map specific data field description is as below:

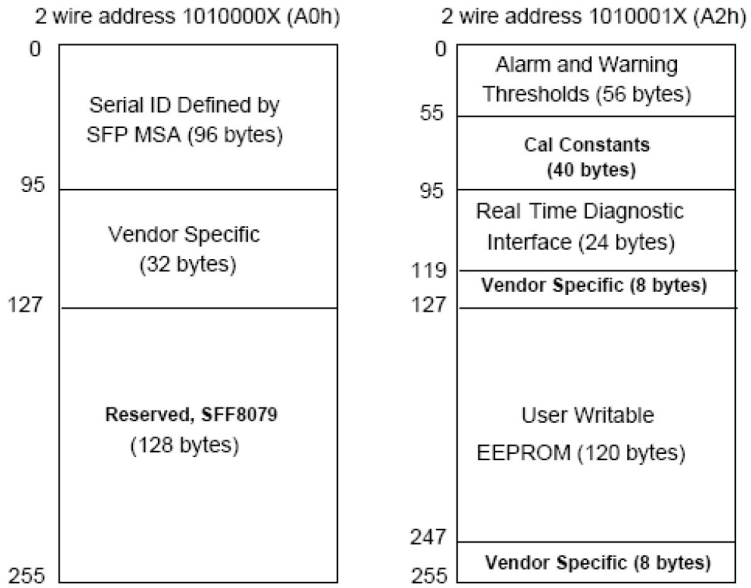

About ProLabs

Our extensive experience comes as standard. For over 20 years ProLabs has delivered optical connectivity solutions that give our customers freedom and choice through our ability to provide seamless interoperability. At the heart of our company is the ability to provide state-of-the-art optical transport and connectivity solutions that are compatible with more than 100 optical switching and transport platforms.

A Complete Portfolio of Network Solutions

ProLabs is focused on innovations in optical transport and connectivity. The combination of our knowledge of optics and networking equipment enables ProLabs to be your single source for optical transport and connectivity solutions from 100Mb to 1.6T while providing innovative solutions that increase network efficiency. We provide the optical connectivity expertise that is compatible with and enhances your switching and transport equipment.

The Trusted Partner

Customer service is our number one value. ProLabs has invested in people, labs and manufacturing capacity to ensure compatible products, and immediate answers to your questions. With Engineering and Manufacturing offices in the U.K. and U.S. augmented by field offices throughout the U.S., U.K. and Asia, ProLabs is able to be our customers best advocate 24 hours a day.

Contact Information

ProLabs US

Email: sales@prolabs.com
Telephone: 952-852-0252

ProLabs UK

Email: salessupport@prolabs.com
Telephone: +44 1285 719 600