SFP-1G-T-DE-C

Dell® SFP-1G-T Compatible TAA 10/100/1000Base-TX SFP Transceiver (Copper, 100m, RJ-45)

Features:

- INF-8074 Compliance
- RJ-45 Connector
- Copper Media Type
- Commercial Temperature 0 to 70 Celsius
- Hot Pluggable
- Metal with Lower EMI
- Excellent ESD Protection
- RoHS Compliant and Lead Free

Applications:

- 1000Base Ethernet
- Access and Enterprise

Product Description

This Dell® SFP-1G-T compatible SFP transceiver provides 10/100/1000Base-TX throughput up to 100m over a copper connection via a RJ-45 connector. It can operate at temperatures between 0 and 70C. This TX module supports 10/100/1000Base auto-negotiation and can be configured to fit your needs. Our transceiver is built to meet or exceed OEM specifications and is guaranteed to be 100% compatible with Dell®. It has been programmed, uniquely serialized, and tested for data-traffic and application to ensure that it will initialize and perform identically. All of our transceivers comply with Multi-Source Agreement (MSA) standards to provide seamless network integration. This transceiver is Trade Agreements Act (TAA) compliant. We stand behind the quality of our products and proudly offer a limited lifetime warranty.

ProLabs' transceivers are RoHS compliant and lead-free.

TAA refers to the Trade Agreements Act (19 U.S.C. & 2501-2581), which is intended to foster fair and open international trade. TAA requires that the U.S. Government may acquire only "U.S.-made or designated country end products.")

Rev. 012126

Absolute Maximum Ratings

Parameter	Symbol	Min.	Typ.	Max.	Unit	Notes
Supply Current	Is		320	375	mA	1
Input Voltage	Vcc	3.13	3.3	3.47	V	2
Maximum Voltage	Vmax			4	V	
Surge Current	Isurge			30	mA	3

Notes:

1. 1.2W max power over full range of voltage and temperature. Power consumption and surge current are higher than the specified values in SFP MSA.
2. Referenced to GND
3. Hot plug above steady state current. Power consumption and surge current are higher than the specified values in SFP MSA.

Recommended Operating Conditions

Parameter	Symbol	Min.	Typ.	Max.	Unit	Notes
Data Rate	BR	10		1000	Mb/sec	3-5
Distance Supported	L			100	m	1
Operating Temperature	Top	0		70	°C	
Storage Temperature	Tsto	-40		85	°C	

Notes:

1. Category 5 UTP. BER <10-12
2. Clock tolerance is +/- 50 ppm
3. By default, the GE-GB-P is a full duplex device in preferred master mode
4. Automatic crossover detection is enabled. External crossover cable is not required
5. 1000Base-T operation requires the host system to have an SGMII interface with no clocks, and the module PHY to be configured per Application Note AN-2036. With a SERDES that does not support SGMII, the module will operate at 1000Base-T only.

Low-Speed Signals

Parameter	Symbol	Min.	Typ.	Max.	Unit	Notes
SFP Output LOW	VOL	0		0.5	V	1
SFP Output High	VOH	Host_Vcc-0.5		Host_Vcc+0.3	V	1
SFP Input LOW	VIL	0		0.8	V	2
SFP Input HIGH	VIH	2		Vcc+0.3	V	2

Notes:

1. 4.7k to 10k pull-up to Host_Vcc, measured at host side of connector
2. 4.7k to 10k pull-up to Vcc, measured at SFP side of connector

High-Speed Signals

Parameter	Symbol	Min.	Typ.	Max.	Unit	Notes
Transmission Line-SFP						
Line Frequency	fL		125		MHz	1
TX Output impedance	Zout, TX		100		Ohm	2
Rx Input Impedance	Zin, RX		100		Ohm	2
Host-SFP						
Single ended data input swing	Vinsing	250		1200	mV	3
Single ended data output swing	Voutsing	350		800	mV	3
Rise/Fall Time	Tr,Tf		175		Psec	4
Tx Input Impedance	Zin		50		Ohm	3
Rx Output Impedance	Zout		50		Ohm	3

Notes:

1. 5-level encoding, per IEEE 802.3
2. Differential, for all Frequencies between 1MHz and 125MHz
3. Single ended
4. 20%-80%

Pin Descriptions

Pin	Symbol	Name/Descriptions	Ref.
1	VeeT	Transmitter Ground (Common with Receiver Ground).	1
2	TX Fault	Transmitter Fault. Not Supported	
3	TDIS	Transmitter Disabled. PHY disabled on high or open	2
4	MOD_DEF(2)	Module Definition 2. Data line for serial ID	3
5	MOD_DEF(1)	Module Definition 1. Clock line for serial ID	3
6	MOD_DEF(0)	Module Definition 0. Grounded within the module	3
7	Rate Select	No connection required	
8	LOS	Loss of Signal indication.	4
9	VeeR	Receiver Ground (common with Transmitter ground)	1
10	VeeR	Receiver Ground (common with Transmitter ground)	1
11	VeeR	Receiver Ground (Common with Transmitter Ground).	1
12	RD-	Receiver Inverted DATA out. AC Coupled.	
13	RD+	Receiver Non-inverted DATA out. AC Coupled.	
14	VeeR	Receiver Ground (Common with Transmitter Ground).	1
15	VccR	Receiver Power Supply.	
16	VccT	Transmitter Power Supply.	
17	VeeT	Transmitter Ground (Common with Receiver Ground).	1
18	TD+	Transmitter Non-Inverted DATA in. AC Coupled.	
19	TD-	Transmitter Inverted DATA in. AC Coupled.	
20	VeeT	Transmitter Ground (Common with Receiver Ground).	1

Notes:

1. Circuit ground is connected to chassis ground
2. PHY disabled on TDIS > 2.0V or open, enabled on TDIS <0.8V
3. Should be pulled up with 4.7k-10k Ohms on host board to a voltage between 2.0V and 3.6V.MOD_DEF (0) pulls line low to indicate module is plugged in.
4. LVTTL compatible with a maximum voltage of 2.5V. Not supported on GE-GB-P

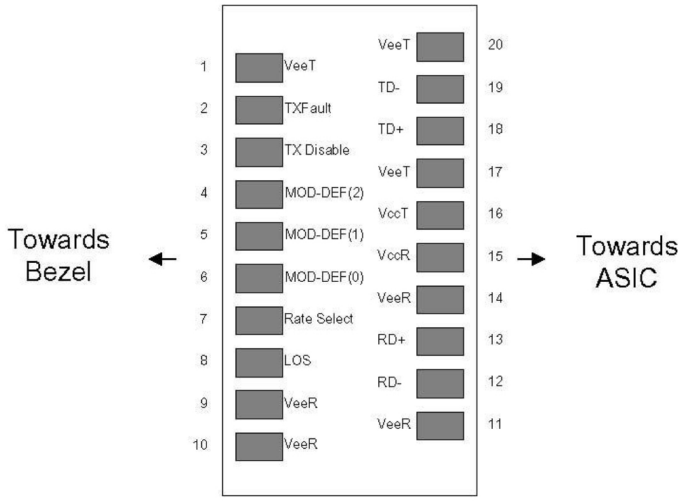

Pin-out of connector Block on Host board

Mechanical Specifications

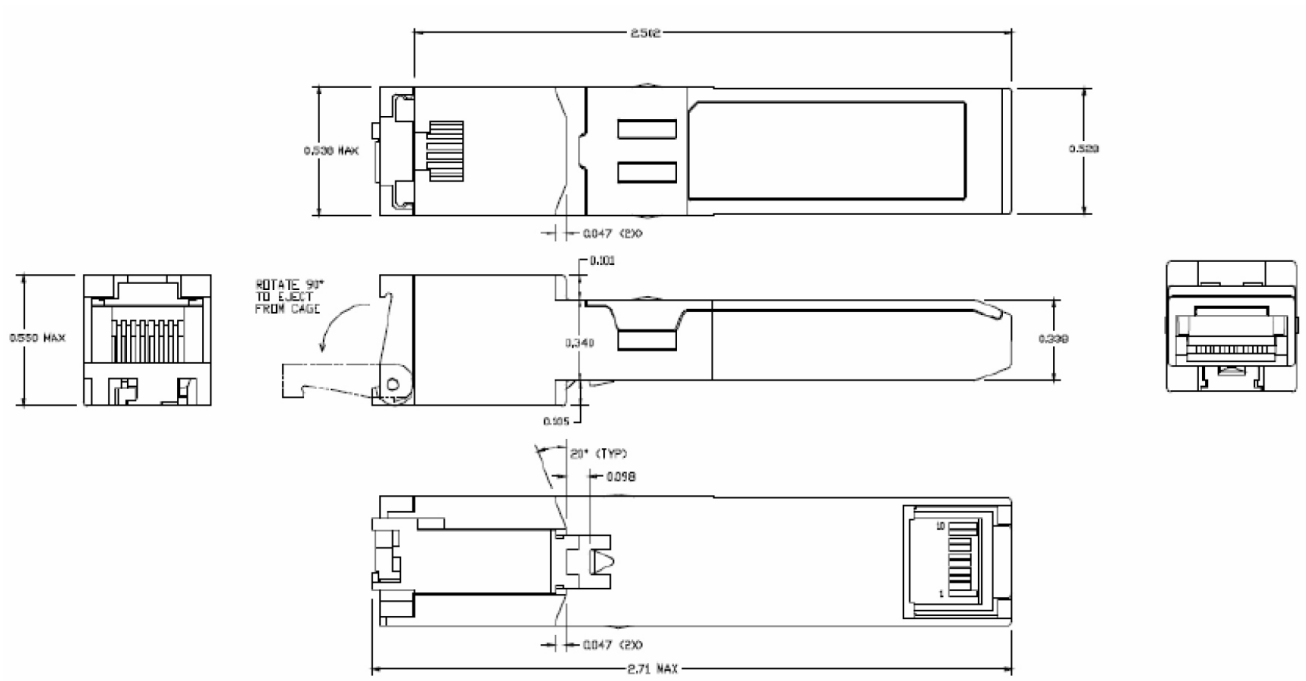

About ProLabs

Our extensive experience comes as standard. For over 20 years ProLabs has delivered optical connectivity solutions that give our customers freedom and choice through our ability to provide seamless interoperability. At the heart of our company is the ability to provide state-of-the-art optical transport and connectivity solutions that are compatible with more than 100 optical switching and transport platforms.

A Complete Portfolio of Network Solutions

ProLabs is focused on innovations in optical transport and connectivity. The combination of our knowledge of optics and networking equipment enables ProLabs to be your single source for optical transport and connectivity solutions from 100Mb to 1.6T while providing innovative solutions that increase network efficiency. We provide the optical connectivity expertise that is compatible with and enhances your switching and transport equipment.

The Trusted Partner

Customer service is our number one value. ProLabs has invested in people, labs and manufacturing capacity to ensure compatible products, and immediate answers to your questions. With Engineering and Manufacturing offices in the U.K. and U.S. augmented by field offices throughout the U.S., U.K. and Asia, ProLabs is able to be our customers best advocate 24 hours a day.

Contact Information

ProLabs US

Email: sales@prolabs.com
Telephone: 952-852-0252

ProLabs UK

Email: salessupport@prolabs.com
Telephone: +44 1285 719 600