SFP-10G-GIG-T-C

Alcatel-Lucent Nokia® SFP-10G-GIG-T Compatible TAA 100/1000/10000Base-TX SFP+ Transceiver (Copper, 30m, RJ-45)

Features:

- SFF-8432 Compliance
- RJ-45 Connector
- Copper Media Type
- Commercial Temperature 0 to 70 Celsius
- Hot Pluggable
- Metal with Lower EMI
- Excellent ESD Protection
- RoHS Compliant and Lead Free

Applications:

- 10GBase Ethernet
- Access and Enterprise

Product Description

This Alcatel-Lucent Nokia® SFP-10G-GIG-T compatible SFP+ transceiver provides 100/1000/10000Base-TX throughput up to 30m over a copper connection via a RJ-45 connector. This TX module supports 100/1000/10000Base auto-negotiation and can be configured to fit your needs. Our transceiver is built to meet or exceed OEM specifications and is guaranteed to be 100% compatible with Alcatel-Lucent Nokia®. It has been programmed, uniquely serialized, and tested for data-traffic and application to ensure that it will initialize and perform identically. All of our transceivers comply with Multi-Source Agreement (MSA) standards to provide seamless network integration. This transceiver is Trade Agreements Act (TAA) compliant. We stand behind the quality of our products and proudly offer a limited lifetime warranty.

ProLabs' transceivers are RoHS compliant and lead-free.

TAA refers to the Trade Agreements Act (19 U.S.C. & 2501-2581), which is intended to foster fair and open international trade. TAA requires that the U.S. Government may acquire only "U.S.-made or designated country end products.")

Rev. 012026

Absolute Maximum Ratings

Parameter	Symbol	Min.	Max.	Unit
Maximum Supply Voltage	Vcc	3.135	3.6	VDC
Storage Temperature	TS	-40	85	°C
Operating Case Temperature	Tc	0	70	°C
Operating Humidity	RH	5	95	%
Maximum Bitrate	B_{max}		11.4	Gbps

Electrical Characteristics (TOP=25°C, Vcc=3.3Volts)

Parameter	Symbol	Min.	Typ.	Max.	Unit	Notes
Power Supply Voltage	Vcc	3.135	3.30	3.465	V	
Low Speed Input Voltage		-0.5		Vcc+0.3	V	
Two-Wire Interface Input Voltage		-0.3		Vcc+0.5	V	
Power (30m @ 25C ambient)			2.3	2.5	W	

Pin Descriptions

Pin	Symbol	Name/Descriptions	Ref.
1	VeeT	Transmitter Ground	1
2	Tx_Fault	Transmitter Fault LVTTL-O	
3	Tx_Disable	Transmitter Disable LVTTL-I	
4	SDA	2-wire Serial Interface Data Line LVTTL-I/O	
5	SCL	2-wire Serial Interface Clock LVTTL-I/O	
6	Mod_ABS	Module Absent, connect to VeeT or VeeR in the module	
7	RS0	Rate Select 0 LVTTL-I	
8	Rx_LOS	Receiver Loss of Signal Indication LVTTL-O	
9	RS1	Rate Select 1 LVTTL-I	
10	VeeR	Receiver Ground	1
11	VeeR	Receiver Ground	1
12	RD-	Receiver Inverted Data Output CML-O	
13	RD+	Receiver Non-Inverted Data Output CML-O	
14	VeeR	Receiver Ground	1
15	VccR	Receiver 3.3V Supply	
16	VccT	Transmitter 3.3V Supply	
17	VeeT	Transmitter Ground	1
18	TD+	Receiver Inverted Data Output CML-I	
19	TD-	Transmitter Inverted Data Input CML-I	
20	VeeT	Module Transmitter Ground	1

Notes:

1. The module signal grounds should be isolated from the module case.

Mechanical Specifications

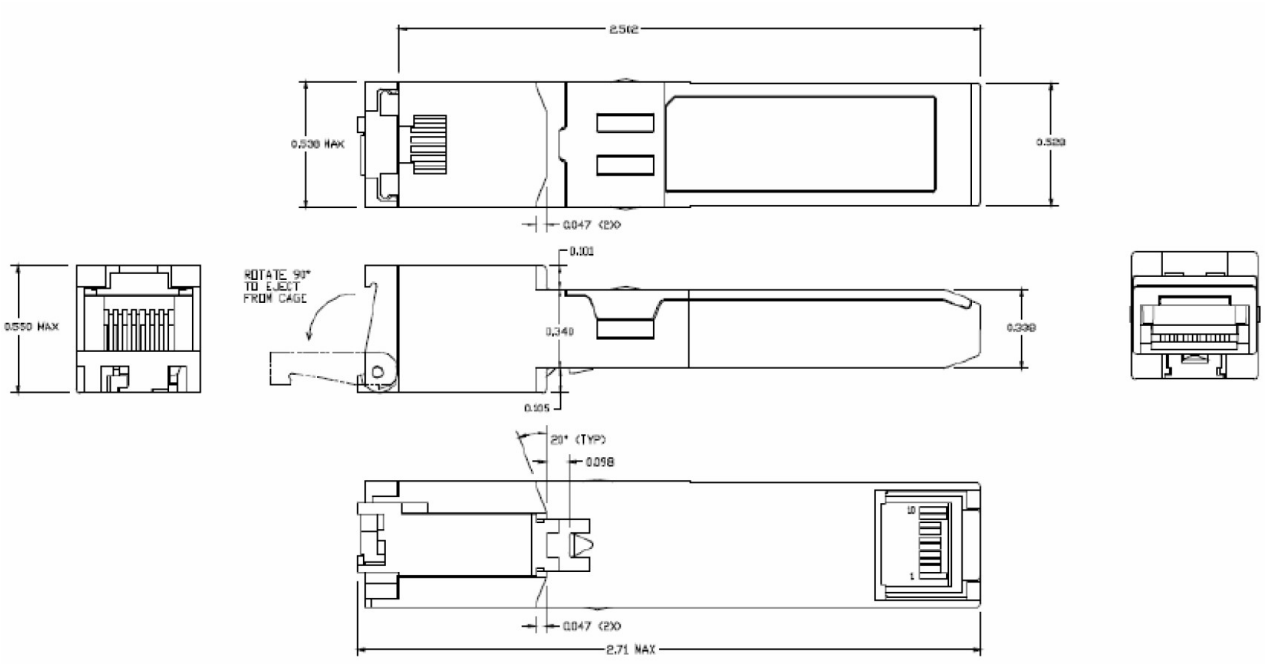

About ProLabs

Our extensive experience comes as standard. For over 20 years ProLabs has delivered optical connectivity solutions that give our customers freedom and choice through our ability to provide seamless interoperability. At the heart of our company is the ability to provide state-of-the-art optical transport and connectivity solutions that are compatible with more than 100 optical switching and transport platforms.

A Complete Portfolio of Network Solutions

ProLabs is focused on innovations in optical transport and connectivity. The combination of our knowledge of optics and networking equipment enables ProLabs to be your single source for optical transport and connectivity solutions from 100Mb to 1.6T while providing innovative solutions that increase network efficiency. We provide the optical connectivity expertise that is compatible with and enhances your switching and transport equipment.

The Trusted Partner

Customer service is our number one value. ProLabs has invested in people, labs and manufacturing capacity to ensure compatible products, and immediate answers to your questions. With Engineering and Manufacturing offices in the U.K. and U.S. augmented by field offices throughout the U.S., U.K. and Asia, ProLabs is able to be our customers best advocate 24 hours a day.

Contact Information

ProLabs US

Email: sales@prolabs.com
Telephone: 952-852-0252

ProLabs UK

Email: salessupport@prolabs.com
Telephone: +44 1285 719 600