SFPP-XGS-ONU-MAC-ASC-I-C

MSA Compliant 9.95Gbs/9.95Gbs XGS PON ONU SFP+ Stick with MAC (SMF, 1270nmTx/1577nmRx, ASC, -40 to 85C)

Features:

- Dual Wavelength
- Bidirectional Operation
- 9.95328Gbps Burst Mode Tx Data Rate
- 9.95328Gbps CW Mode Rx Data Rate
- ITU-T G.984.3/G.988/G.9807.1/G.987.3 Compliant
- ASC Optical Receptacle
- Single 3.3V DC Input Voltage
- Industrial Temperature -40 to 85 Celsius
- RoHS Compliant and lead-Free

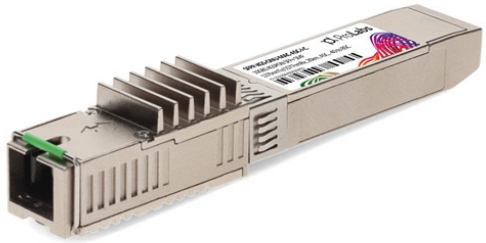

Applications:

- XGS PON
- Access and Enterprise

Product Description

This MSA compliant SFP transceiver provides 9.95Gbs/9.95Gbs XGS-PON throughput up to 20km over single-mode fiber (SMF) using a wavelength of 1270nmTx/1577nmRx via an ASC connector. It can operate at temperatures between -40 and 85C. This bidirectional unit must be used with another transceiver or network appliance of complementing wavelengths. This easy to install, hot swappable transceiver has been programmed, uniquely serialized and data-traffic and application tested to ensure that it will initialize and perform identically. Digital optical monitoring (DOM) support is also present to allow access to real-time operating parameters. We stand behind the quality of our products and proudly offer a limited lifetime warranty.

ProLabs' transceivers are RoHS compliant and lead-free.

Absolute Maximum Ratings

Parameter	Symbol	Min.	Typ.	Max.	Unit	Notes
Maximum Supply Voltage	Vcc	0		3.6	V	
Storage Ambient Temperature	Tstg	-40		85	°C	
Operating Case Temperature	Tc	-40	25	85	°C	
Relative Humidity Storage	RHstg	0		95	%	
Relative Humidity Operating	RHop	0		85	%	
Control Function Logic Levels						
Receiver Loss of Signal Logic State	Rx_LOS	0		Vcc+0.5	V	LVTTL
Transmit Disable Logic State	Tx_Disable	0		Vcc+0.5	V	LVTTL

Note:

Exceeding the Absolute Maximum Ratings may cause irreversible damage to the device. The device is not intended to be operated under the condition of simultaneous Absolute Maximum Ratings, a condition which may cause irreversible damage to the device.

Electrical Characteristics

Parameter	Symbol	Min.	Typ.	Max.	Unit	Notes
Power Supply Voltage	Vcc	3.135	3.30	3.465	V	
Power Supply Current	Icc			900	mA	
Transmitter						
Tx_Data Differential Input Voltage	VIH-VIL	200		1200	mV	
Tx_Disable = High (Transmitter Off/Disabled)	VIH	2.0		Vcc+0.3	V	
Tx_Disable = Low (Transmitter On/Enabled)	VIL	0		0.8	V	
Receiver						
Rx_Data Differential Output Voltage	VOH-VOL	200		900	mV	
Rx_LOS = High (Receiver Off)	VOH	2.4		3.3	V	LVTTL
Rx_LOS = Low (Receiver On)	VOL	0		0.8	V	LVTTL

Optical Characteristics

Parameter	Symbol	Min.	Typ.	Max.	Unit	Notes
Transmitter						
Laser Type			DFB Laser			
Transmitter Signal Rate			9.95328		Gbps	
Average Output Power	POUT	4		9	dBm	
Optical Center Wavelength	λ	1260	1270	1280	nm	
Spectral Width	Δλ			1	nm	
Side-Mode Suppression Mode	SMSR	30			dB	
Extinction Ratio	ER	6			dB	
Receiver						
Receiver Type			CW APD/TIA			
Receiver Signal Rate			9.95328		Gbps	
Optical Center Wavelength	λ	1575	1577	1581	nm	
Receiver Sensitivity	S			-28	dBm	1
Received Optical Overload		-9			dBm	1
Rx_LOS of Signal Assert	LOSA	-44			dBm	
Rx_LOS of Signal De-Assert	LOSD			-29	dBm	
Rx_LOS of Signal Hysteresis	LOSH	0.5		6	dB	

Notes:

1. BER≤10^{-3}, PRBS 2^{31}-1, and ER=6dB.

Pin Descriptions

Pin	Symbol	Name/Descriptions	Notes
1	1PPS	1PPS Input/Output Pin.	5
2	Tx_Fault	Transmitter Fault. Low=Normal Operation. High=Fault Indication. This pin is pulled-up to the VccT in the module.	1
3	Tx_Disable	Transmit Disable. Low=Normal Operation. High=Disables Module.	1
4	SDA	2-Wire Serial Interface Data. Host Board shall use a pull-up resistor connected to the Host Board 3.3V.	3
5	SCL	2-Wire Serial Interface Clock. Host Board shall use a pull-up resistor connected to the Host Board 3.3V.	3
6	MOD_ABS	Pull down to ground.	2
7	Dying Gasp	Dying Gasp Indication. High=Normal Operation. Low=Power Failure.	4
8	Rx_LOS	Receiver Loss of Signal. Low=Normal Operation. High=Loss of Signal.	2, 3, 5
9	PIN9	Reserved.	
10	GND_R	Receiver Ground.	
11	GND_R	Receiver Ground.	
12	RD-	Rx_Data Output (Inverted). AC coupled inside the module.	
13	RD+	Rx_Data Output (Non-Inverted). AC coupled inside the module.	
14	GND_R	Receiver Ground.	
15	VccR	Receiver DC Power.	3.3V+/-5%
16	VccT	Transmitter DC Power.	3.3V+/-5%
17	GND_T	Transmitter Ground.	
18	TD+	Tx_Data Input (Non-Inverted). AC coupled inside the module.	
19	TD-	Tx_Data Input (Inverted). AC coupled inside the module.	
20	GND_T	Transmitter Ground.	

Notes:

1. 4.7kΩ-10kΩ pull-up resistor within the module VccT.
2. Require a pull-up resistor of 4.7kΩ-10kΩ on the host board.
3. 4.7kΩ-10kΩ pull-up resistor within the module VccR.
4. Voltage Detect Input for Dying Gasp. When the voltage on this pin is low, a Dying Gasp event is triggered. A 100kΩ resistor is used to pull-up to DC Power in the module.
5. 1PPS can be defined on PIN1, PIN8, or PIN9 as required.

Pin Assignment

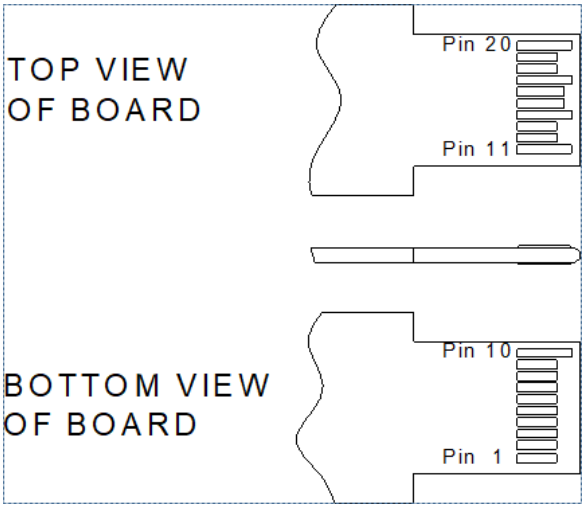

Block Diagram

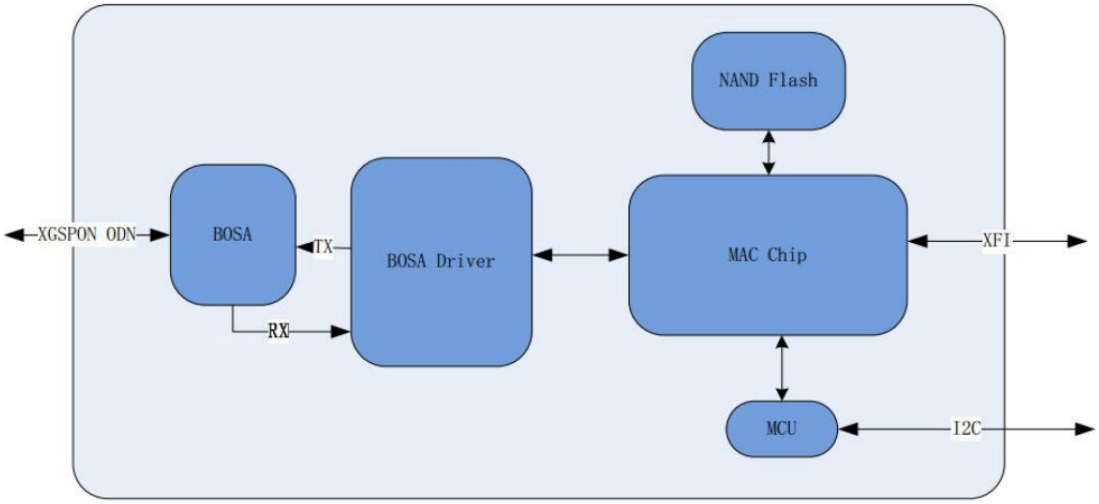

Electrical Interface

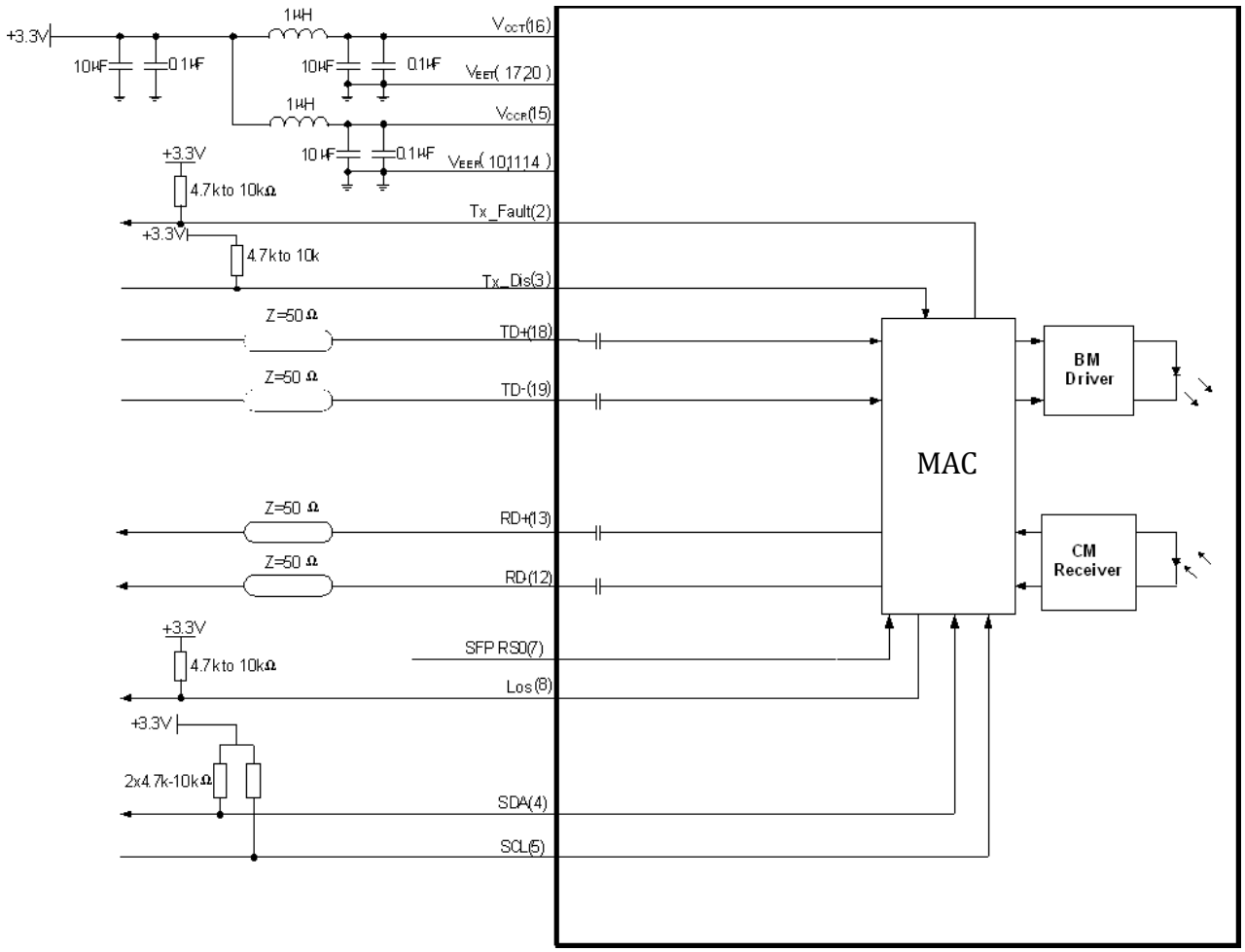

Mechanical Specifications

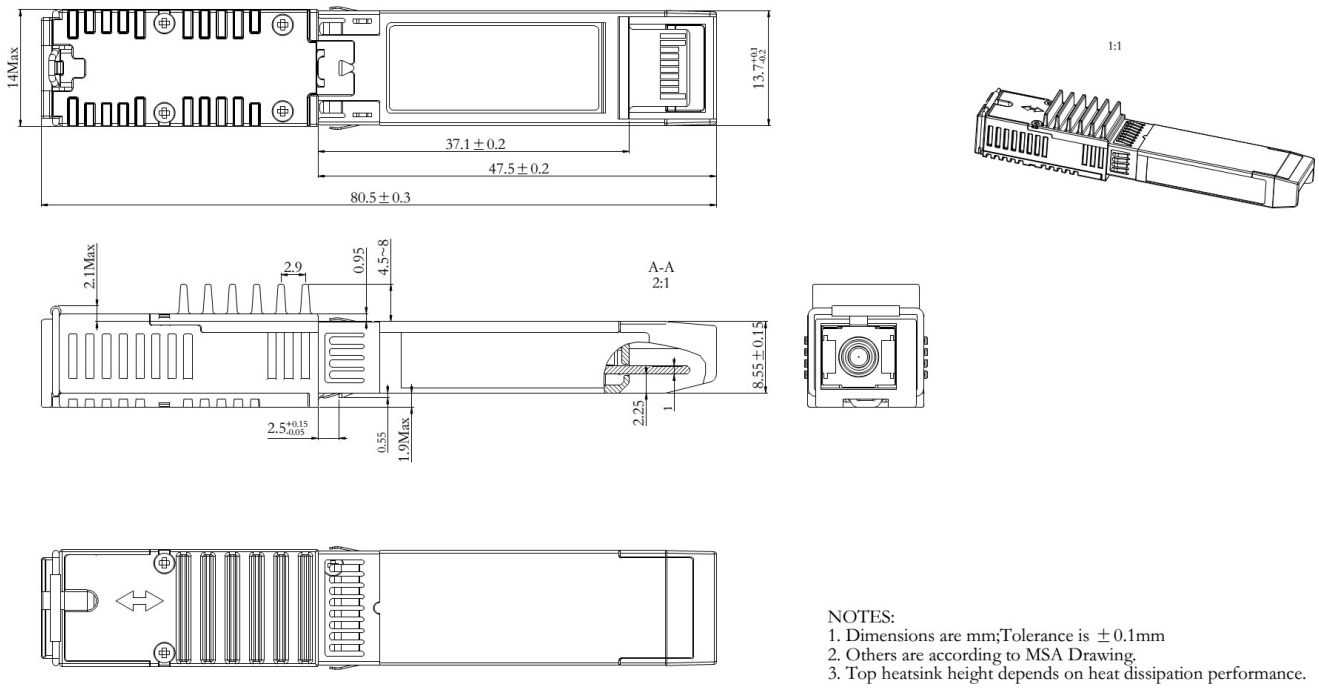

NOTES:
1. Dimensions are mm;Tolerance is ±0.1mm
2. Others are according to MSA Drawing.
3. Top heatsink height depends on heat dissipation performance.

EEPROM Information

EEPROM memory map-specific data field description is as below:

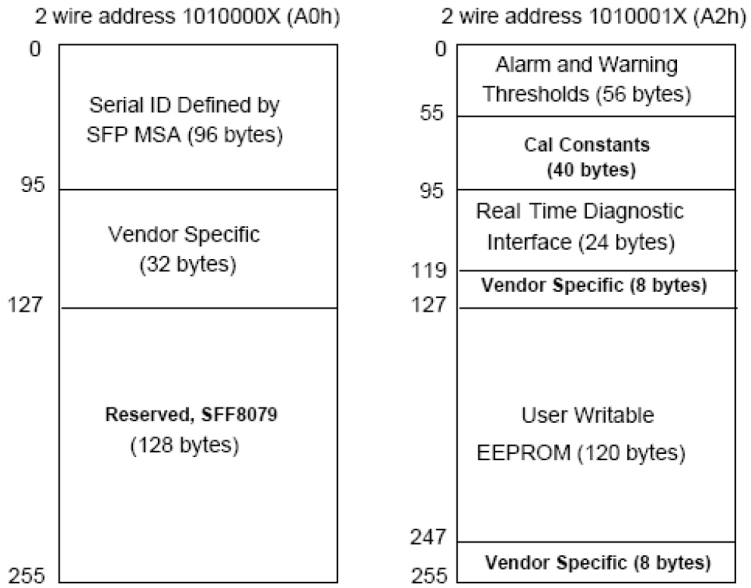

About ProLabs

Our extensive experience comes as standard. For over 20 years ProLabs has delivered optical connectivity solutions that give our customers freedom and choice through our ability to provide seamless interoperability. At the heart of our company is the ability to provide state-of-the-art optical transport and connectivity solutions that are compatible with more than 100 optical switching and transport platforms.

A Complete Portfolio of Network Solutions

ProLabs is focused on innovations in optical transport and connectivity. The combination of our knowledge of optics and networking equipment enables ProLabs to be your single source for optical transport and connectivity solutions from 100Mb to 1.6T while providing innovative solutions that increase network efficiency. We provide the optical connectivity expertise that is compatible with and enhances your switching and transport equipment.

The Trusted Partner

Customer service is our number one value. ProLabs has invested in people, labs and manufacturing capacity to ensure compatible products, and immediate answers to your questions. With Engineering and Manufacturing offices in the U.K. and U.S. augmented by field offices throughout the U.S., U.K. and Asia, ProLabs is able to be our customers best advocate 24 hours a day.

Contact Information

ProLabs US

Email: sales@prolabs.com
Telephone: 952-852-0252

ProLabs UK

Email: salessupport@prolabs.com
Telephone: +44 1285 719 600