SFPP-XGS-ONU-I-ASC-C

MSA Compliant 10GBase-XGS PON ONU SFP+ Transceiver (SMF, 1270nmTx/1577nmRx, 20km, ASC, DOM, -40 to 85C)

Features:

- 2x10 SFP+ Die Cast Housing
- ASC Optical Receptacle
- One single-mode fiber
- Industrial Temperature -40 to 85 Celsius

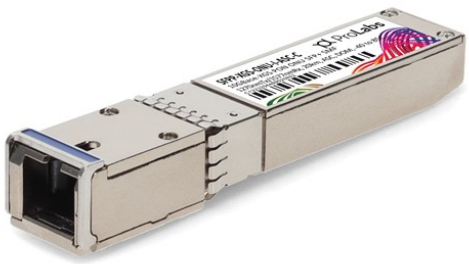

Applications:

- XGS PON ONU
- Broadband Access

Product Description

This MSA compliant SFP+ transceiver provides 10GBase-XGS throughput up to 20km over single-mode fiber (SMF) using a wavelength of 1270nmTx/1577nmRx via an ASC connector. It is capable of withstanding rugged environments and can operate at temperatures between -40 and 85C. All of our transceivers are built to comply with Multi-Source Agreement (MSA) standards and are uniquely serialized and tested for data-traffic and application to ensure seamless network integration. Additional product features include Digital Optical Monitoring (DOM) support which allows access to real-time operating parameters. We stand behind the quality of our products and proudly offer a limited lifetime warranty.

ProLabs' transceivers are RoHS compliant and lead-free.

Regulatory Compliance

- ESD to the Electrical PINs: compatible with MIL-STD-883E Method 3015.4
- ESD to the LC Receptacle: compatible with IEC 61000-4-3
- EMI/EMC compatible with FCC Part 15 Subpart B Rules, EN55022:2010
- Laser Eye Safety compatible with FDA 21CFR, EN60950-1& EN (IEC) 60825-1,2
- RoHS compliant with EU RoHS 2.0 directive 2015/863/EU

Absolute Maximum Ratings

Parameter	Symbol	Min.	Typ.	Max.	Unit
Maximum Supply Voltage	Vcc	0		3.6	V
Storage Ambient Temperature	T_{stg}	-40		85	°C
Operating Case Temperature	Tc	-40	25	85	°C
Relative Humidity Storage	RHStg	0		95	%
Relative Humidity Operating	RH_{Op}	0		85	%

Note:

1. Exceeding the Absolute Maximum Ratings may cause irreversible damage to the device. The device is not intended to be operated under the condition of simultaneous Absolute Maximum Ratings, a condition which may cause irreversible damage to the device.

Absolute Maximum Ratings - Control Function Logic Levels

Parameter	Symbol	Min.	Max.	Unit	Notes
Receiver Loss of Signal Logic State	Rx_LOS	0	V_{CC}+0.5	V	LVTTL
Transmit Burst_Enable Logic State	BM_{ENABLE}	0	V_{CC}+0.5	V	LVTTL

Electrical Characteristics

Parameter	Symbol	Min.	Typ.	Max.	Unit	Notes
Module Supply Voltage	Vcc	3.135	3.30	3.465	V	
Module Supply Current	IIN	150	230	400	mA	
Transmitter						
Tx_Data Differential Input Voltage	VIN	190		700	mV	
Tx_DIS=High (Transmitter Off/Disabled)	VIH	2.0		V_{CC}+0.3	V	1
Tx_DIS=Low (Transmitter On/Enabled)	VIL	0		0.8	V	1
Receiver						
Rx_Data Differential Output Voltage	VOUT	300		850	mV	2
Rx_LOS=High (Receiver Off)	VOH	2.4		3.3	V	LVTTL
Rx_LOS=Low (Receiver On)	VOL	0		0.8	V	LVTTL

Notes:

1. LVTTL Burst Mode.
2. CML Rx_DATA Electrical Output (AC coupled internally).

Optical Characteristics

Parameter	Symbol	Min.	Typ.	Max.	Unit	Notes
Transmitter						
Laser Type			DFB Laser			
Transmitter Signal Rate			9.95328		Gbps	
Average Output Power	Pout	+4		+9	dBm	
Optical Center Wavelength	λ	1260	1270	1280	nm	
Spectral Width	Δλ			1	nm	
Side-Mode Suppression Mode	SMSR	30			dB	
Extinction Ratio	ER	6			dB	
Burst-On Time	TBurst_On			128.6	ns	
Burst-Off Time	TBurst_Off			128.6	ns	
Receiver						
Receiver Type			CW APD/TIA			
Receiver Signal Rate			9.95328		Gbps	
Optical Center Wavelength	λ		1577		nm	
Receiver Sensitivity	S			-28	dBm	1
Received Optical Overload	P_{IN}(SAT)	-8			dBm	1
Rx_LOS Assert	P_A	-42			dBm	
Rx_LOS De-Assert	P_D			-29	dBm	
Rx_LOS Hysteresis	PHy	0.5		5	dB	

Notes:

1. BER≤10^{-3}, PRBS 2^{31}-1, and ER=8dB.

Pin Descriptions

Pin	Symbol	Name/Descriptions	Ref.
1	GND	Module Ground.	
2	Tx_Fault	Transmitter Fault.	1
3	Burst_Enable	Burst Enable Input. When asserted high, transmitter output is turned off.	
4	SDA	2-Wire Serial Interface Data Line (MOD-DEF2).	
5	SCL	2-Wire Serial Interface Clock (MOD-DEF1).	
6	MOD_ABS	Module Absent - connected to VeeT.	1
7	Tx_SD	Transmitter State Indication, Tx_Indication Assert High, when transmitter on.	
8	Rx_LOS	Loss of Signal indication. Logic 0 indicates normal operation.	1
9	P_Down	Power Down High=Normal Operation, Low=Power Down（only power down Tx).	2
10	GND	Module Ground.	
11	GND	Module Ground.	
12	RD-	Receiver Inverted DATA out. AC Coupled.	
13	RD+	Receiver Non-Inverted DATA out. AC Coupled.	
14	GND	Module Ground.	
15	VccR	Receiver Power Supply.	
16	VccT	Transmitter Power Supply.	
17	GND	Module Ground.	
18	TD+	Transmitter Non-Inverted DATA in. AC Coupled.	
19	TD-	Transmitter Inverted DATA in. AC Coupled.	
20	GND	Module Ground.	

Notes:

1. Shall be pulled up with 4.7kΩ-10kΩ to a voltage between 3.15V and 3.6V on the host board.
2. 4.7kΩ-10kΩ pull-up resistor within the module.

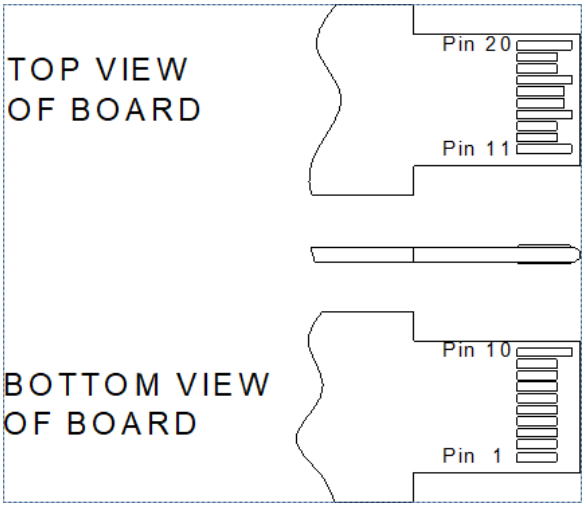

Electrical Interface

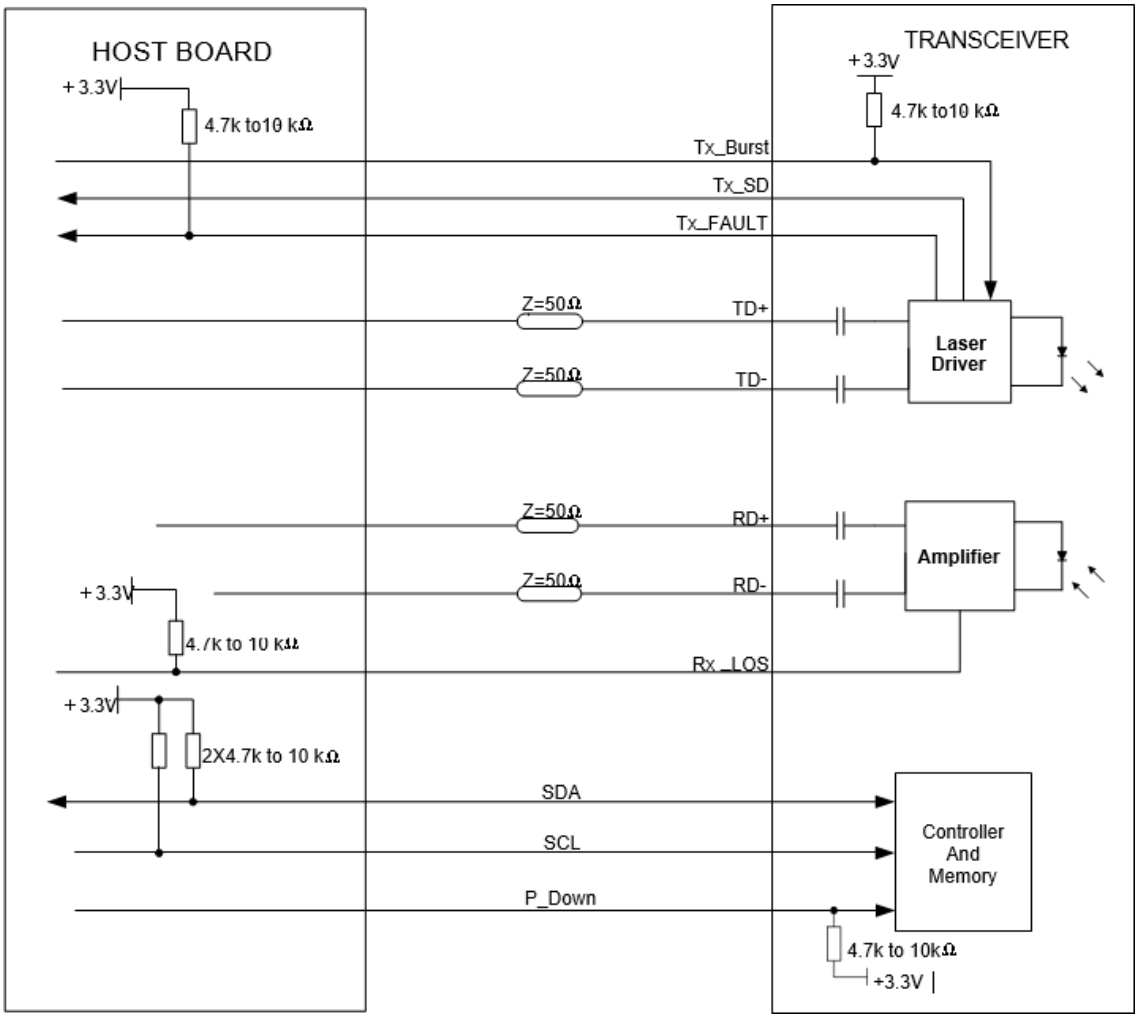

Mechanical Specifications

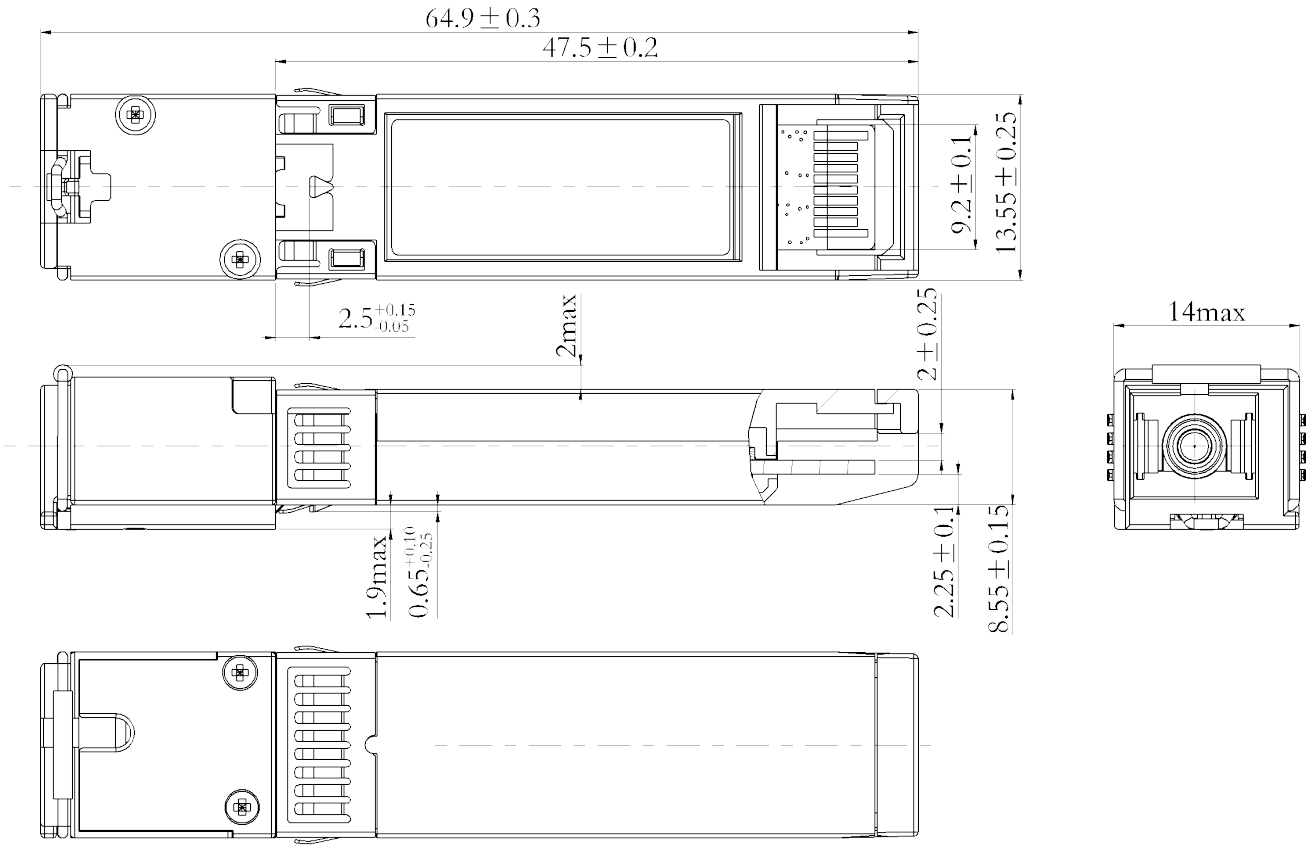

NOTES:

1.TOLERANCE: ± 0.1MM.
2.OTHERS ACCORDING WITH SFF-8074/SFF-8432 OR CUSTOMER SPEC.
3.LIGHT PORT ACCORDING WITH FIBER CONNECTOR SPEC.

EEPROM Information

EEPROM memory map specific data field description is as below:

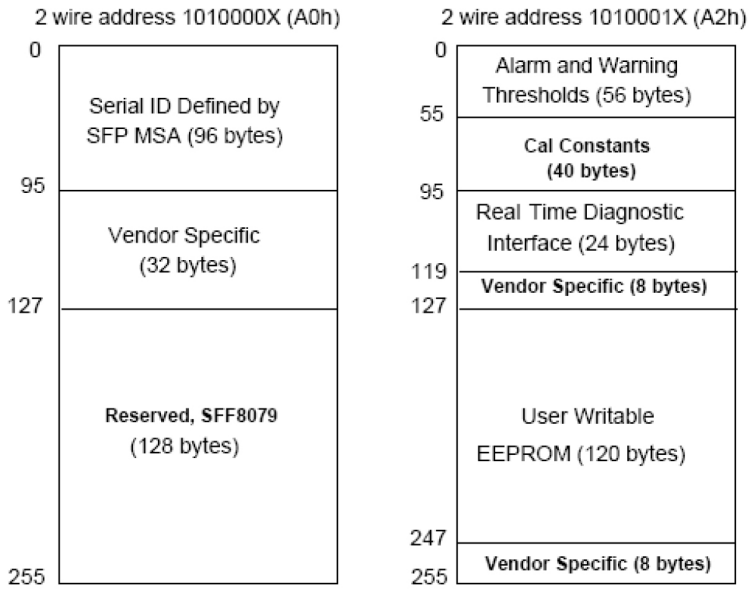

About ProLabs

Our extensive experience comes as standard. For over 20 years ProLabs has delivered optical connectivity solutions that give our customers freedom and choice through our ability to provide seamless interoperability. At the heart of our company is the ability to provide state-of-the-art optical transport and connectivity solutions that are compatible with more than 100 optical switching and transport platforms.

A Complete Portfolio of Network Solutions

ProLabs is focused on innovations in optical transport and connectivity. The combination of our knowledge of optics and networking equipment enables ProLabs to be your single source for optical transport and connectivity solutions from 100Mb to 1.6T while providing innovative solutions that increase network efficiency. We provide the optical connectivity expertise that is compatible with and enhances your switching and transport equipment.

The Trusted Partner

Customer service is our number one value. ProLabs has invested in people, labs and manufacturing capacity to ensure compatible products, and immediate answers to your questions. With Engineering and Manufacturing offices in the U.K. and U.S. augmented by field offices throughout the U.S., U.K. and Asia, ProLabs is able to be our customers best advocate 24 hours a day.

Contact Information

ProLabs US

Email: sales@prolabs.com
Telephone: 952-852-0252

ProLabs UK

Email: salessupport@prolabs.com
Telephone: +44 1285 719 600