SFPP-XGS-OLT-N2-C

MSA Compliant 10GBase-N2 XGS-PON OLT SFP+ Transceiver (SMF, 1577nmTx/1270nmRx, 20km, SC, DOM)

Features:

- Hot Pluggable SFP+
- 3.3V DC Power Supply
- 4 Lambda
- SC receptacle optical connector
- 2x10 SFP+ Electrical Interface
- ITU-T G.9807.1 Class N2 compliant
- Commercial Temperature 0 to 70 Celsius
- RoHS compliant and Lead Free

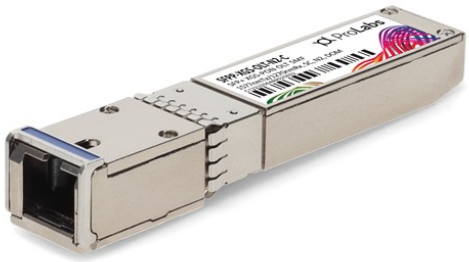

Applications:

- XGS-PON OLT
- Access and Enterprise

Product Description

This MSA compliant SFP+ transceiver provides 10GBase-N2 throughput up to 20km over single-mode fiber (SMF) using a wavelength of 1577nmTx/1270nmRx via a SC connector. It is guaranteed to be 100% compatible with the equivalent MSA compliant transceiver. This easy to install, hot swappable transceiver has been programmed, uniquely serialized and data-traffic and application tested to ensure that it will initialize and perform identically. Digital optical monitoring (DOM) support is also present to allow access to real-time operating parameters. We stand behind the quality of our products and proudly offer a limited lifetime warranty.

ProLabs' transceivers are RoHS compliant and lead-free.

Absolute Maximum Ratings

Parameter	Symbol	Min.	Max.	Unit	Notes
Maximum Supply Voltage	Vcc3	0	3.6	V	
Storage Temperature	Tstg	-40	85	°C	
Operating Temperature	Tc	0	70	°C	
Operating Relative Humidity	RH	5	85	%	

Electrical Characteristics

Parameter	Symbol	Min.	Typ.	Max.	Unit	Notes
Supply Voltage	Vcc3	3.14	3.3	3.47	V	
Supply Current	Icc3			750	mA	
Module Power Dissipation	P_{DISS}			2.5	W	
Transmitter						
Data Input Differential Swing	VIN	120		850	mVp-p	
Input Differential Impedance	ZIN	80	100	120	Ω	
Tx_Disable (Asserted)	VDH	2.0		3.3	V	
Tx_Disable (Negated)	VDL	0		0.8	V	
Tx_Fault Output Voltage - High		2.4		3.3	V	
Tx_Fault Output Voltage - Low		0		0.4	V	
Receiver						
Differential Output Differential Swing	VRXDIFF	400		800	mVp-p	
Signal Detected Voltage - High	Vsd_h	2		3.3	V	
Signal Detected Voltage - Low	Vsd_l	0		0.4	V	

Optical Characteristics

Parameter	Symbol	Min.	Typ.	Max.	Unit	Notes
Transmitter (9.953G)						
Data Rate	BR		9.953		Gbps	
Center Wavelength	λC	1575	1577	1580	nm	
Spectral Width (-20dB)	Δλ			1	nm	
SMSR		30			dB	
Optical Power Output	POUT	4		7	dBm	
Extinction Ratio	ER	8.2			dB	
Eye Mask Margin	EM	Compliance ITU.T G.9807.1 Requirement				
Optical Output Power with Tx Off	Poff			-39	dBm	
$RIN_{12}OMA$				-128	dB/Hz	
Receiver (9.953/2.488G)						
Input Operating Wavelength	λRX	1260	1270	1280	nm	
Receiver Sensitivity (BER 10^{-3})	@9.953			-28	dBm	
Receiver Sensitivity (BER 10^{-4})	@2.488			-29.5	dBm	
Receiver Overload (BER 10^{-12})	@9.953	-5			dBm	
Receiver Overload (BER 10^{-12})	@2.488	-7			dBm	
Maximum Input Power		-3			dBm	
Receiver Reflectance	RRX			-12	dB	
Receiver Tolerance to Reflected Optical Power				10	dB	
Signal Detected De-Assert Level	Psdd	-40			dBm	
Signal Detected Assert Level	Psda			-29	dBm	
SD Hysteresis	SD_Hys		0.5		dB	

Digital Diagnostic Functions

Parameter	Range	Unit	Accuracy	Notes
Temperature	-40℃ to 85℃	℃	±3	LSB equal to 1/256C
Supply Voltage（3.3V）	3.14V to 3.47V	V	±3%	LSB equal to 100uV
Tx Bias Current	0mA to 150mA	mA	±10%	LSB equal to 4uA
Tx Optical Power	4dBm to 7dBm	dBm	±2	LSB equal to 0.2uW
Rx Power	-30dBm to -6dBm	dBm	±3	LSB equal to 0.1uW

Upstream Timing

Parameter	Symbol	Min.	Typ.	Max.	Unit	Notes
Burst Receiver Settling Time	T_SETTLE			100	ns	
Burst Signal Detect Assert	T_SDA		25	100	ns	
Burst Signal Detect De-Assert	T_SDD		100		ns	1
Guard Time	Tg	51.4			ns	
Reset Pulse Width	Tw	25			ns	
Reset Time Overlapping Preamble	T_overlap	0			ns	2
Setup Time of Rate Level for Following Burst	T_setup	5			ns	

Notes:

1. Auto reset function is applied. Signal detect de-assert time is about 100ns forced by auto reset and will short to about 20ns with external Reset pulse.
2. Reset pulse is required to be partially inside the preamble.

Upstream Timing Diagram

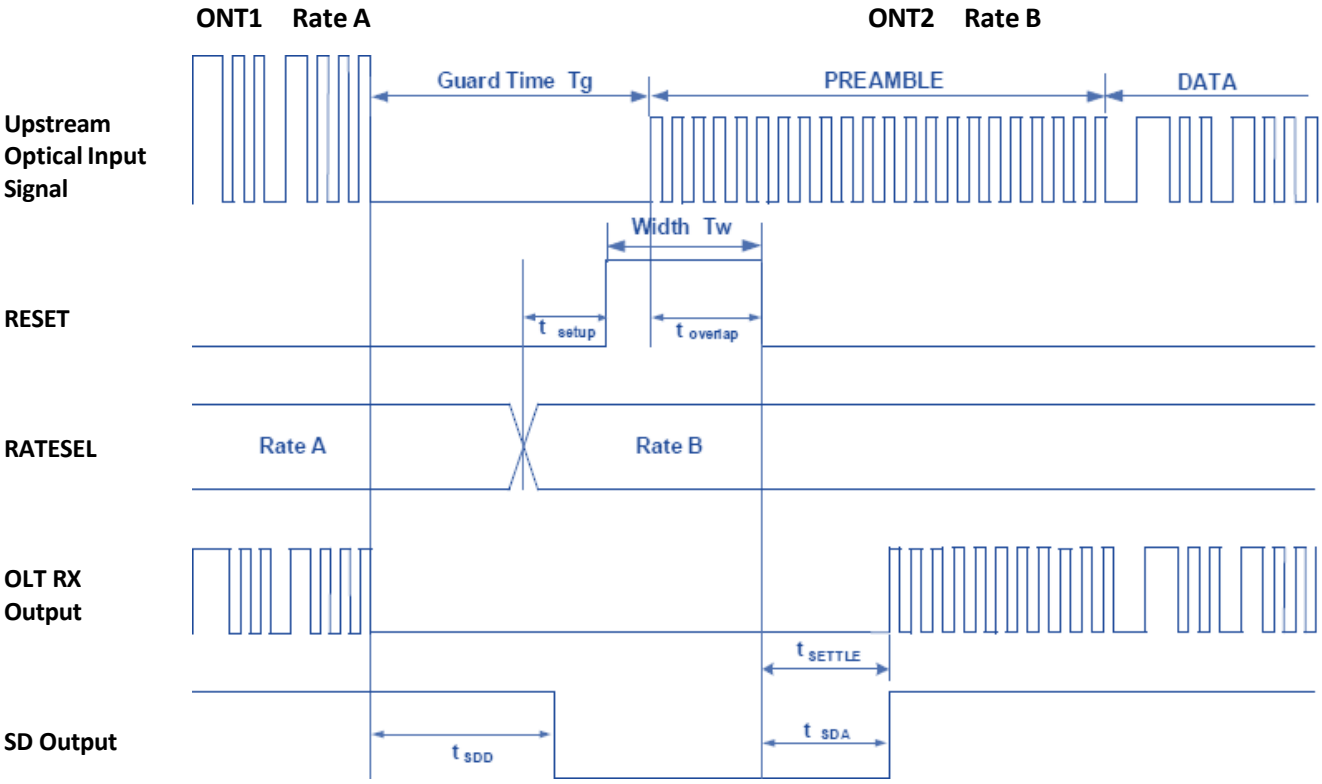

Digital RSSI Sample/Hold Timing

Parameter	Symbol	Min.	Typ.	Max.	Unit	Notes
I^2C Read Time	T_p	500			µs	
Optical Input Signal Width	Tont	300			ns	
RSSI Monitor Range	Pmon	-30		-7	dBm	
RSSI Precision	Prssi	-3	+/-2	3	dB	
RSSI Trigger Delay	T_{tri} (TRI Delay)	0	300		ns	
RSSI Trigger Width	T_{I2C} (TRI Width)	500		T_{ont}-T_{tri}	ns	

Note: $T_{tri}+T_{i2c}<T_{ont}$.

Digital RSSI Sample/Hold Timing Diagram

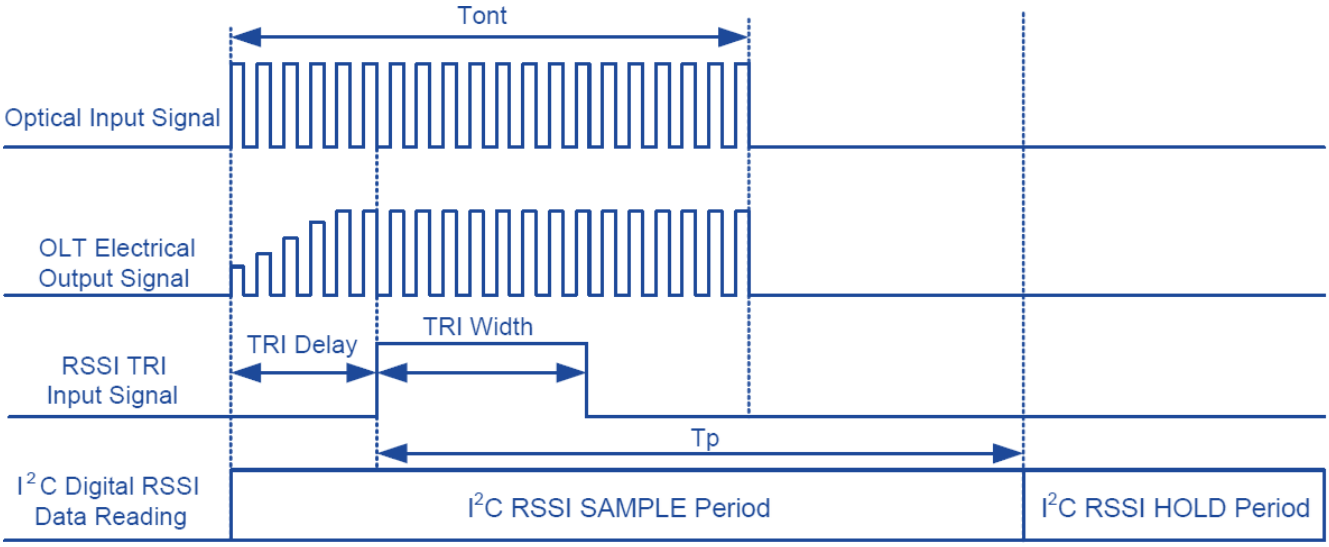

Pin-Out Definitions

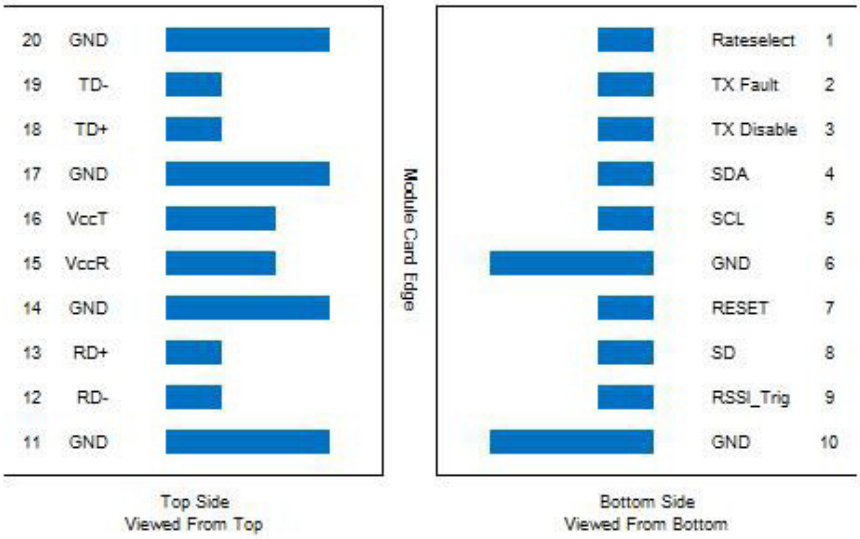

Pin Descriptions

Pin	Logic	Symbol	Description	Note
1	LVTTL	Rate_Select	Rate Select.	1
2	LVTTL	Tx_Fault	High Voltage: Tx Laser Fault or Safety. Low Voltage: Normal Operation.	
3	LVTTL	Tx_Disable	Active “high” to disable laser.	
4		SDA	2-Wire Serial Interface SDA.	
5		SCL	2-Wire Serial Interface SCL.	
6		GND	Module Ground.	
7		Reset	Reset for TIA/LIA.	
8	LVTTL	SD	“Logic 1” indicates normal operation.	
9	LVTTL	RSSI_Trig	RSSI Trigger.	
10		GND	Module Ground.	
11		GND	Module Ground.	
12	LVCML	RD-	2.5/10G LVCML output with DC coupling.	
13	LVCML	RD+	2.5/10G LVCML output with DC coupling.	
14		GND	Module Ground.	
15		VccR	+3.3V Power Supply.	
16		VccT	+3.3V Power Supply.	
17		GND	Module Ground.	
18	LVCML	TD+	10G LVCML input with AC coupling.	
19	LVCML	TD-	10G LVCML input with AC coupling.	
20		GND	Module Ground.	

Notes:

1. Rate Select is high-speed when Pin 1 value is "high" and low-speed when Pin 1 value is "low."

Transceiver Block Diagram

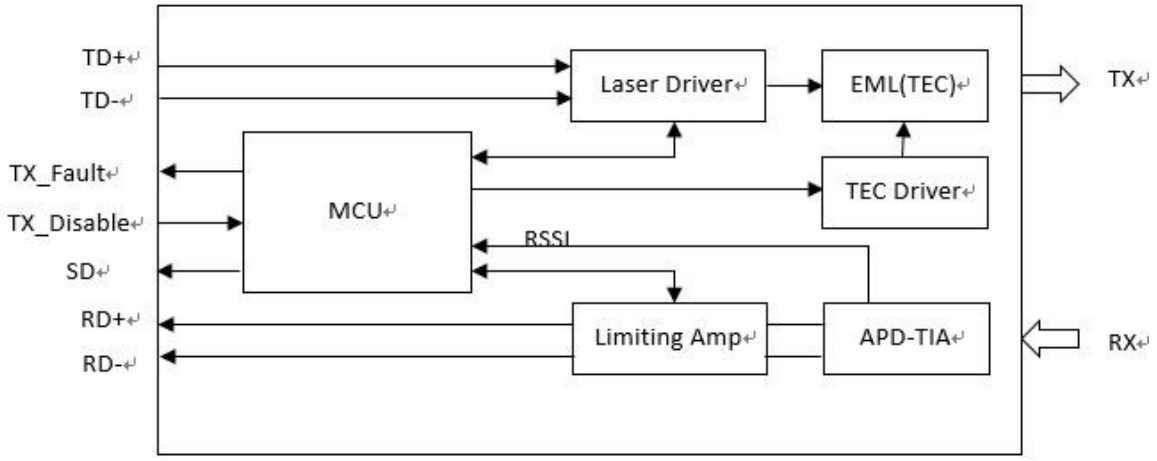

Transmitter Section

Tx_Disable

Tx_Disable is an input pin that is used to shut down the XGSPON transmitter optical output at the same time. It is pulled up within the module with a 4.7kΩ to 10kΩ resistor. Its states are: low (0 – 0.8V) - transmitter on; (>0.8, < 2.0V) - undefined; high (2.0 – VCC) - transmitter disabled; open - transmitter disabled. The Tx_Disable signal is “high” (LVTTL “logic 1”) to turn off the laser output. The laser will turn on when Tx_Disable is “low” (LVTTL “logic 0”).

XGSPON TD+/-

XGSPON_TD+/- are the differential XGSPON transmitter inputs. They are AC-coupled, differential lines with 100Ω differential termination inside the module. It allows a differential input swing of 120-850mV, 9.953Gbps data rate.

Receiver Section

XGSPON_SD

SD (Signal Detect) is an open collector/drain output, which should be pulled up with a 4.7kΩ to 10kΩ resistor to a voltage between 2.4V and Vcc+0.3V. When “low,” this output indicates the received optical power is below the worst-case receiver sensitivity (as defined by the standard in use). “High” indicates normal operation. In the “low” state, the output will be pulled to < 0.4V.

XGSPON RD+/-

These are the XGSPON differential receiver outputs. They are DC coupled 100Ω differential lines which should be terminated with 100Ω (differential) at the user SERDES. The AC coupling is done on the host board. The voltage swing on these lines will be between 400 and 800mV differential output when properly terminated.

Recommended Interface Circuit

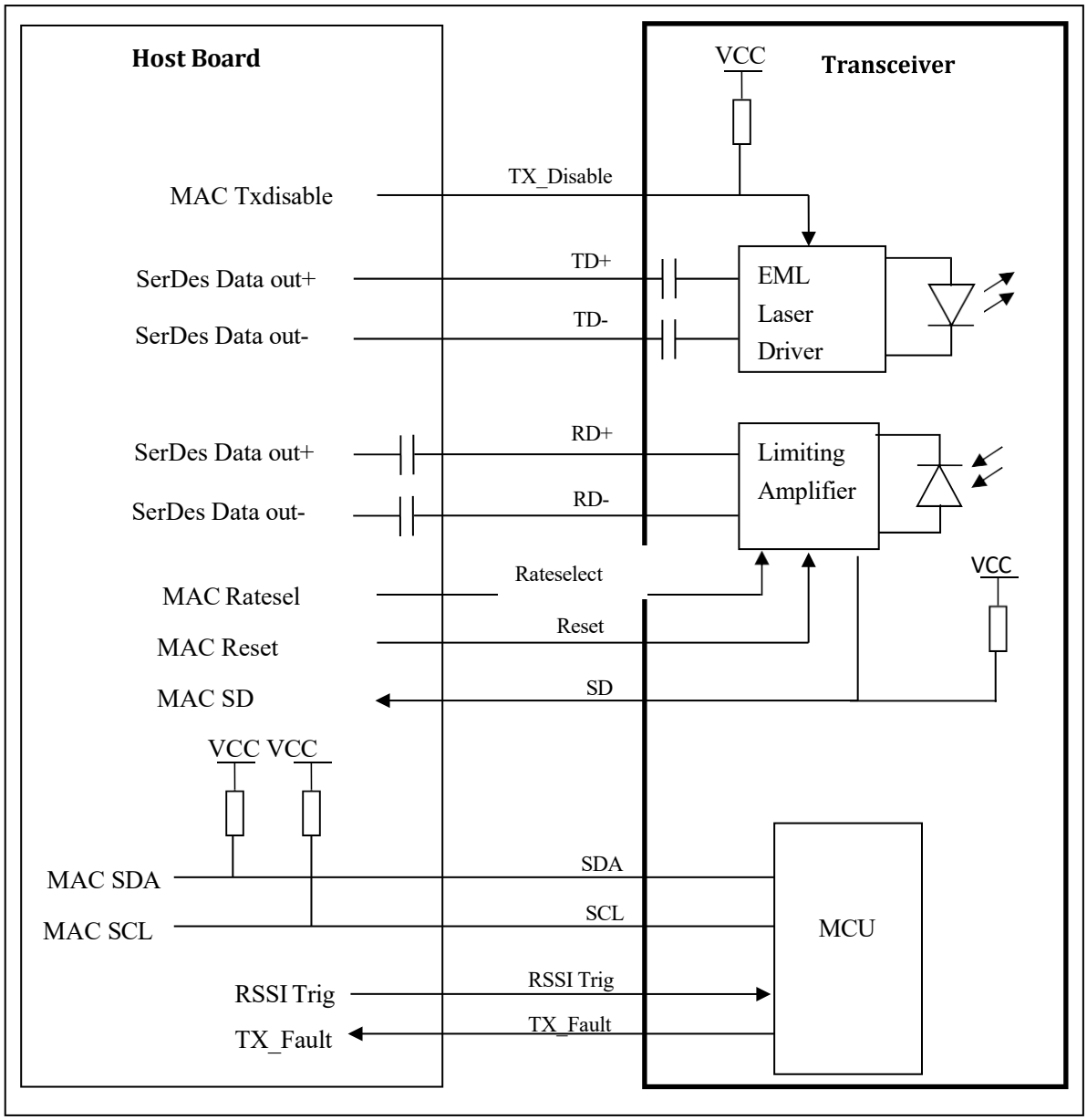

Mechanical Specifications

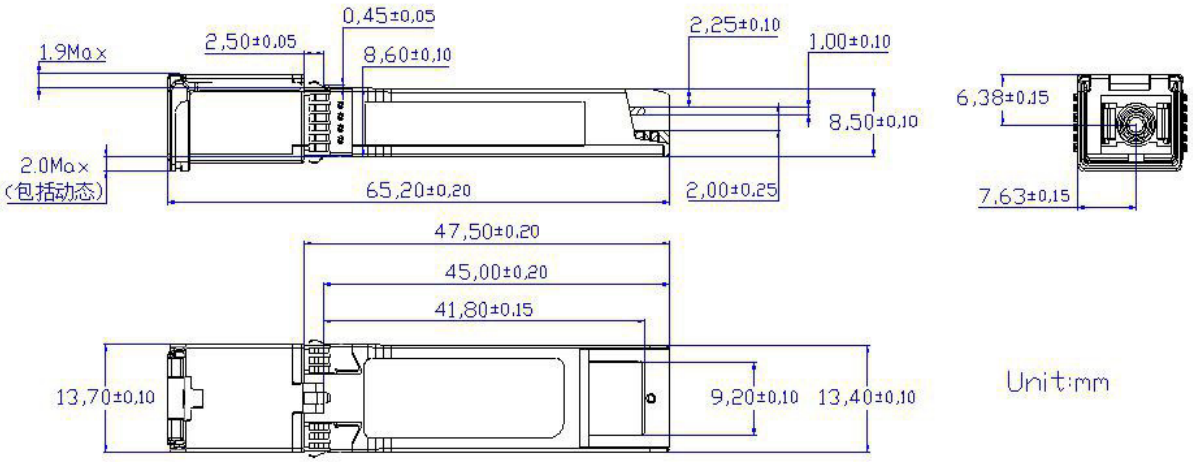

Digital Diagnostic Memory Map

Compatible with SFF-8472.

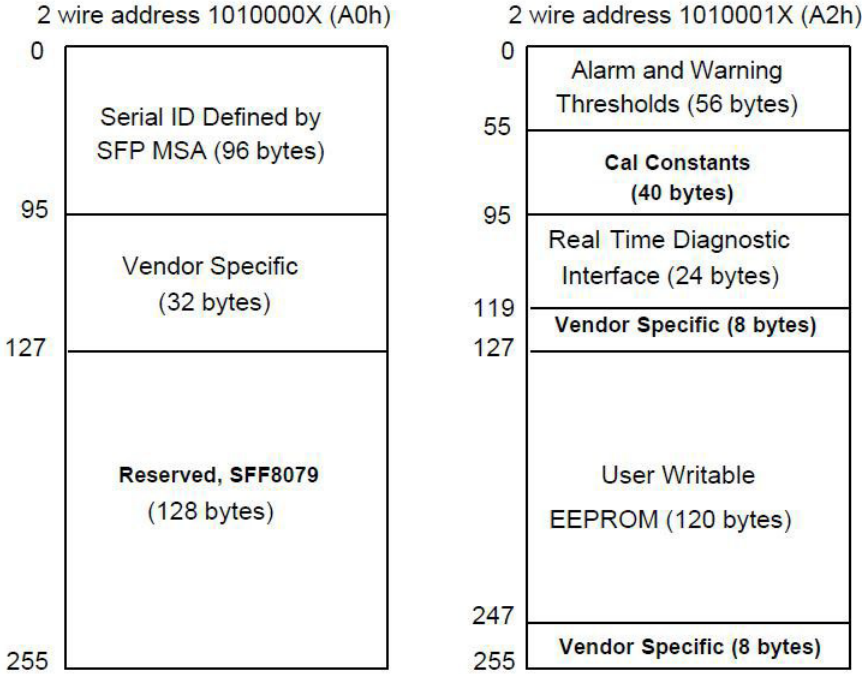

About ProLabs

Our extensive experience comes as standard. For over 20 years ProLabs has delivered optical connectivity solutions that give our customers freedom and choice through our ability to provide seamless interoperability. At the heart of our company is the ability to provide state-of-the-art optical transport and connectivity solutions that are compatible with more than 100 optical switching and transport platforms.

A Complete Portfolio of Network Solutions

ProLabs is focused on innovations in optical transport and connectivity. The combination of our knowledge of optics and networking equipment enables ProLabs to be your single source for optical transport and connectivity solutions from 100Mb to 1.6T while providing innovative solutions that increase network efficiency. We provide the optical connectivity expertise that is compatible with and enhances your switching and transport equipment.

The Trusted Partner

Customer service is our number one value. ProLabs has invested in people, labs and manufacturing capacity to ensure compatible products, and immediate answers to your questions. With Engineering and Manufacturing offices in the U.K. and U.S. augmented by field offices throughout the U.S., U.K. and Asia, ProLabs is able to be our customers best advocate 24 hours a day.

Contact Information

ProLabs US

Email: sales@prolabs.com
Telephone: 952-852-0252

ProLabs UK

Email: salessupport@prolabs.com
Telephone: +44 1285 719 600