QSFP-100G-ZR4-S-C

Cisco® QSFP-100G-ZR4-S Compatible TAA 100GBase-ZR4 QSFP28 Transceiver (SMF, 1295nm to 1309nm, 80km, LC, DOM)

Features:

- Compliant with IEEE 802.3ba, ITU-T G.959
- Compliant with 4x28G (CEI-28G-VSR)
- Single 3.3V Power Supply
- Maximum Power Consumption of 5.5W
- Transmitter: cooled 4x25Gbps LAN WDM EML TOSA
- Receiver: 4x25Gbps SOA+PIN ROSA
- 4x25G Electrical Interface
- Hot-pluggable QSFP28 MSA form factor
- Duplex LC Connector
- Single-mode Fiber
- Commercial Temperature 0 to 70 Celsius
- RoHS Compliant and Lead Free

Applications:

- 100GBase Ethernet
- Access and Enterprise

Product Description

This Cisco® QSFP-100G-ZR4-S compatible QSFP28 transceiver provides 100GBase-ZR4 throughput up to 80km over single-mode fiber (SMF) using a wavelength of 1295nm to 1309nm via an LC connector. It can operate at temperatures between 0 and 70C. Our transceiver is built to meet or exceed OEM specifications and is guaranteed to be 100% compatible with Cisco®. It has been programmed, uniquely serialized, and tested for data-traffic and application to ensure that it will initialize and perform identically. All of our transceivers comply with Multi-Source Agreement (MSA) standards to provide seamless network integration. Additional product features include Digital Optical Monitoring (DOM) support which allows access to real-time operating parameters. This transceiver is Trade Agreements Act (TAA) compliant. We stand behind the quality of our products and proudly offer a limited lifetime warranty.

ProLabs' transceivers are RoHS compliant and lead-free.

TAA refers to the Trade Agreements Act (19 U.S.C. & 2501-2581), which is intended to foster fair and open international trade. TAA requires that the U.S. Government may acquire only "U.S.-made or designated country end products.")

Rev. 012026

Absolute Maximum Ratings

Parameter	Symbol	Min.	Typ.	Max.	Unit
Supply Voltage	Vcc	-0.5		3.6	V
Storage Temperature	Tstg	-40		85	ºC
Operating Case Temperature	Tc	0		70	ºC
Relative Humidity	RH	5		85	%
Rx Damage Threshold Per Lane	THd	5.5			dBm
Data Rate	DR		25.78125		Gbps
Link Distance with G.652 (With FEC)	D1			80	km

Electrical Characteristics

Parameter	Symbol	Min.	Typ.	Max.	Unit	Notes
Supply Voltage	Vcc	3.135	3.3	3.465	V	
Supply Current	Icc			1.66	A	
Power Consumption				5.5	W	
Transmitter						
Input Differential Impedance	RIN		100		Ω	1
Differential Data Input Swing	VIN,pp	180		1000	mV	
Transmit Disable Voltage	VD	Vcc-1.3		Vcc	V	
Transmit Enable Voltage	VEN	Vee		Vee+0.8	V	2
Receiver						
Differential Data Output Swing	VOUT,pp	300		850	mV	3
LOS Fault	VLOS Fault	Vcc-1.3		Host_Vcc	V	4
LOS Normal	VLOS Normal	Vee		Vee+0.8	V	4

Notes:

1. Connected directly to the Tx data input pins. AC coupled thereafter.
2. Optional for Tx disable.
3. Into 100Ω differential termination.
4. Loss of Signal is LVTTL. “Logic 0” indicates normal operation. “Logic 1” indicates no signal detected.
5. Tested under recommended operating conditions, unless otherwise noted.

Optical Characteristics

Parameter		Symbol	Min.	Typ.	Max.	Unit	Notes
Transmitter							
Center Wavelength	**Lane 0**	λ0	1294.53	1295.56	1296.59	nm	
	Lane 1	λ1	1299.02	1300.05	1301.09	nm	
	Lane 2	λ2	1301.54	1304.58	1305.63	nm	
	Lane 3	λ3	1308.09	1309.14	1310.19	nm	
Total Launch Power (100GE)		Pavg	7		12.5	dBm	1
Average Launch Power Per Lane (100GE)		PLane	1		6.5	dBm	1
Difference in Launch Power Between Lanes		PΔ			3	dB	
Average Laser Output Power (Laser Off)		Poff			-30	dBm	
Side-Mode Suppression Ratio		SMSR	30			dB	
Extinction Ratio (100GE & OTU4)		ER	6			dB	
Receiver							
Center Wavelength	**Lane 0**	λ0	1294.53	1295.56	1296.59	nm	
	Lane 1	λ1	1299.02	1300.05	1301.09	nm	
	Lane 2	λ2	1301.54	1304.58	1305.63	nm	
	Lane 3	λ3	1308.09	1309.14	1310.19	nm	
Damage Threshold		PDAM			5.5	dBm	
Average Rx Power Per Lane		PRX_Lane	-28		4.5	dBm	
Receiver Sensitivity Per Lane (OMA)					-26.4	dBm	2
LOS Assert		LOSA	-40			dBm	
LOS De-Assert		LOSD			-29	dBm	
LOS Hysteresis		LOSH	0.5			dB	

Notes:

1. The optical power is launched into SMF.
2. Measured with a PRBS 2^{31}-1 test pattern @25.78125Gbps, BER≤$5E^{-5}$.

Pin Descriptions

Pin	Logic	Symbol	Name/Description	Notes
1		GND	Module Ground.	1
2	CML-I	Tx2-	Transmitter Inverted Data Input.	
3	CML-I	Tx2+	Transmitter Non-Inverted Data Input.	
4		GND	Module Ground.	1
5	CML-I	Tx4-	Transmitter Inverted Data Input.	
6	CML-I	Tx4+	Transmitter Non-Inverted Data Input.	
7		GND	Module Ground.	1
8	LVTTL-I	ModSelL	Module Select.	
9	LVTTL-I	ResetL	Module Reset.	
10		VccRx	+3.3V Receiver Power Supply.	2
11	LVCMOS-I/O	SCL	2-Wire Serial Interface Clock.	
12	LVCMOS-I/O	SDA	2-Wire Serial Interface Data.	
13		GND	Module Ground.	1
14	CML-O	Rx3+	Receiver Non-Inverted Data Output.	
15	CML-O	Rx3-	Receiver Inverted Data Output.	
16		GND	Module Ground.	1
17	CML-O	Rx1+	Receiver Non-Inverted Data Output.	
18	CML-O	Rx1-	Receiver Inverted Data Output.	
19		GND	Module Ground.	1
20		GND	Module Ground.	1
21	CML-O	Rx2-	Receiver Inverted Data Output.	
22	CML-O	Rx2+	Receiver Non-Inverted Data Output.	
23		GND	Module Ground.	1
24	CML-O	Rx4-	Receiver Inverted Data Output.	
25	CML-O	Rx4+	Receiver Non-Inverted Data Output.	
26		GND	Module Ground.	1
27	LVTTL-O	ModPrsL	Module Present.	
28	LVTTL-O	IntL/RxLOSL	Interrupt. Optionally configurable as RxLOSL via the management interface (SFF-8636).	
29		VccTx	+3.3V Transmitter Power Supply.	2
30		Vcc1	+3.3V Power Supply.	2
31	LVTTL-I	LPMode/TxDis	Low-Power Mode. Optionally configurable as TxDis via the management interface (SFF-8636).	
32		GND	Module Ground.	1
33	CML-I	Tx3+	Transmitter Non-Inverted Data Input.	
34	CML-I	Tx3-	Transmitter Inverted Data Input.	

35		GND	Module Ground.	1
36	CML-I	Tx1+	Transmitter Non-Inverted Data.	
37	CML-I	Tx1-	Transmitter Inverted Data Input.	
38		GND	Module Ground.	1

Notes:

1. GND is the symbol for signal and supply (power) common for the module. All are common within the module, and all module voltages are referenced to this potential unless otherwise noted. Connect these directly to the host board signal-common ground plane.
2. VccRx, Vcc1, and VccTx are applied concurrently and may be internally connected within the module in any combination. Vcc contacts in SFF-8662 and SFF-8672 each have a steady state current rating of 1A.

Electrical Pin-Out Details

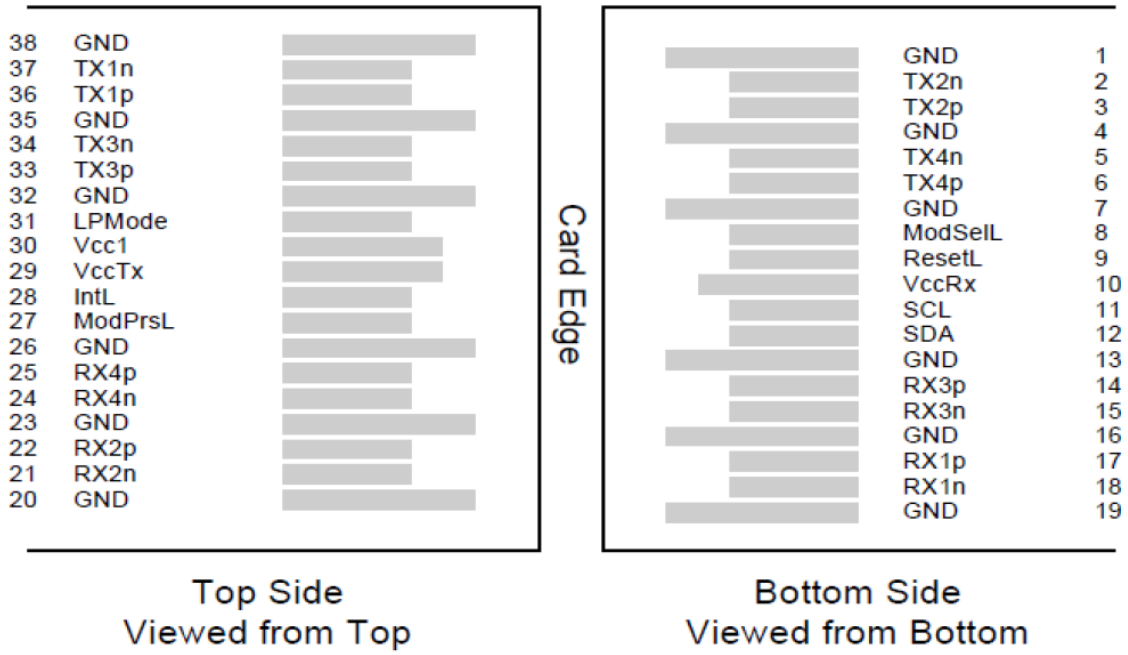

Functional Diagram

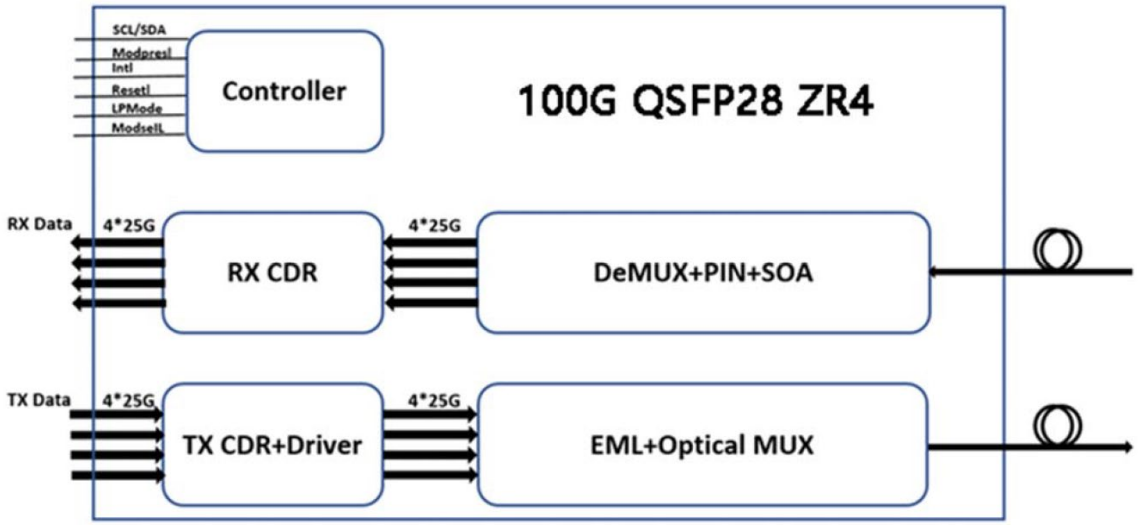

Recommended Power Supply Filter

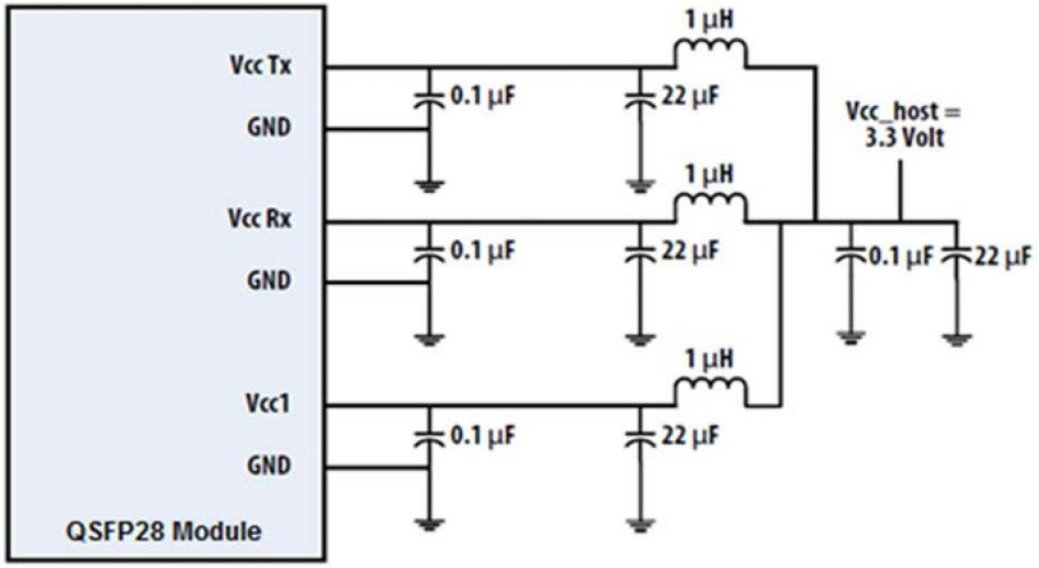

Mechanical Specifications

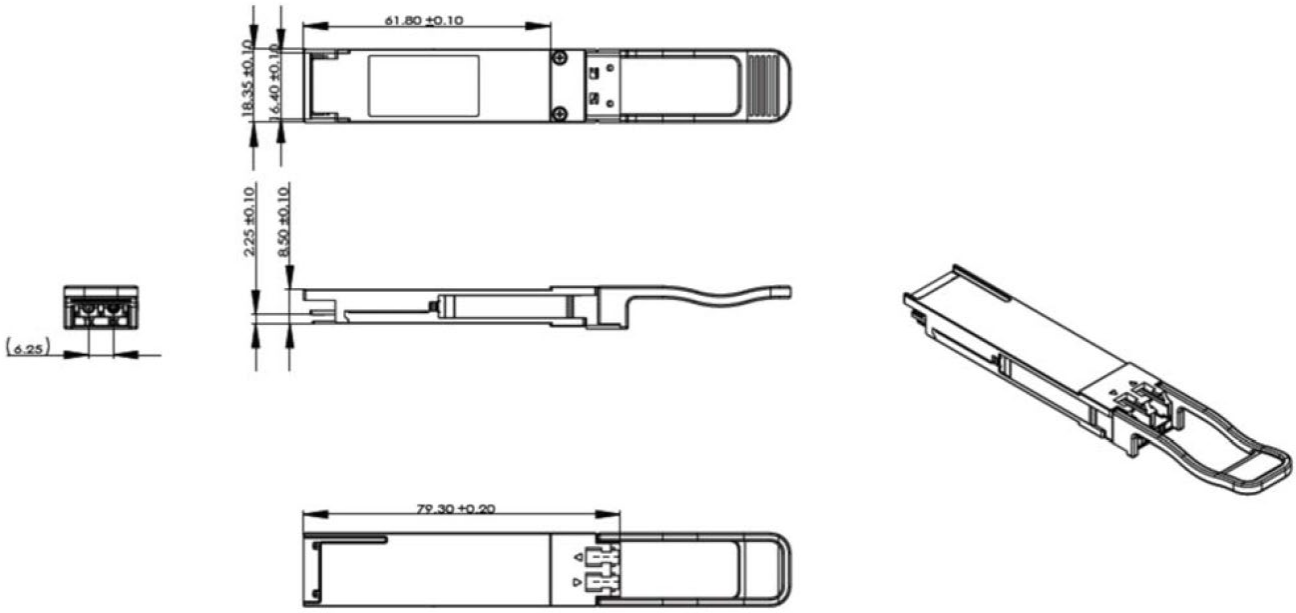

About ProLabs

Our extensive experience comes as standard. For over 20 years ProLabs has delivered optical connectivity solutions that give our customers freedom and choice through our ability to provide seamless interoperability. At the heart of our company is the ability to provide state-of-the-art optical transport and connectivity solutions that are compatible with more than 100 optical switching and transport platforms.

A Complete Portfolio of Network Solutions

ProLabs is focused on innovations in optical transport and connectivity. The combination of our knowledge of optics and networking equipment enables ProLabs to be your single source for optical transport and connectivity solutions from 100Mb to 1.6T while providing innovative solutions that increase network efficiency. We provide the optical connectivity expertise that is compatible with and enhances your switching and transport equipment.

The Trusted Partner

Customer service is our number one value. ProLabs has invested in people, labs and manufacturing capacity to ensure compatible products, and immediate answers to your questions. With Engineering and Manufacturing offices in the U.K. and U.S. augmented by field offices throughout the U.S., U.K. and Asia, ProLabs is able to be our customers best advocate 24 hours a day.

Contact Information

ProLabs US

Email: sales@prolabs.com
Telephone: 952-852-0252

ProLabs UK

Email: salessupport@prolabs.com
Telephone: +44 1285 719 600