QSFP-100G-SWDM4-DE-C

Dell® Compatible TAA 100GBase-SWDM4 QSFP28 Transceiver (MMF, 850nm, 100m, LC, DOM)

Features:

- SFF-8665 Compliance
- Duplex LC Connector
- Multi-mode Fiber
- Commercial Temperature 0 to 70 Celsius
- Hot Pluggable
- Metal with Lower EMI
- Excellent ESD Protection
- RoHS Compliant and Lead Free

Applications:

- 100GBase Ethernet
- Access and Enterprise

Product Description

This Dell® compatible QSFP28 transceiver provides 100GBase-SWDM4 throughput up to 100m over OM4 multi-mode fiber (MMF) using a wavelength of 850nm via an LC connector. It can operate at temperatures between 0 and 70C. Our transceiver is built to meet or exceed OEM specifications and is guaranteed to be 100% compatible with Dell®. It has been programmed, uniquely serialized, and tested for data-traffic and application to ensure that it will initialize and perform identically. All of our transceivers comply with Multi-Source Agreement (MSA) standards to provide seamless network integration. Additional product features include Digital Optical Monitoring (DOM) support which allows access to real-time operating parameters. This transceiver is Trade Agreements Act (TAA) compliant. We stand behind the quality of our products and proudly offer a limited lifetime warranty.

ProLabs' transceivers are RoHS compliant and lead-free.

TAA refers to the Trade Agreements Act (19 U.S.C. & 2501-2581), which is intended to foster fair and open international trade. TAA requires that the U.S. Government may acquire only "U.S.-made or designated country end products.")

Rev. 012026

Absolute Maximum Ratings

Parameter	Symbol	Min	Typ	Max	Unit	Notes
Maximum Supply Voltage	Vcc	-0.5		3.6	V	
Storage Temperature	TS	-40		85	°C	
Case Operating Temperature	TOP	0		70	°C	1
Relative Humidity	RH	15		85	%	2
Receiver Damage Threshold, per Lane	PRdmg	3.8			dBm	

Notes:

1. Temporary excursions case operating temperature of -5 to -75 °C not exceeding 72 hours.
2. Non-condensing.

Electrical Characteristics

Parameter	Symbol	Min	Typ	Max	Unit	Notes
Supply Voltage	Vcc	3.135		3.465	V	
Supply Current	Icc			1.5	A	
Module total power	P			3.5	W	1
Transmitter						
Signaling rate per lane		25.78125 ± 100ppm			Gb/s	
Differential pk-pk input voltage tolerance	Vin,pp,diff			900	mV	
Single-ended voltage tolerance	Vin,pp	-0.35		+3.3	V	
Module stress input test	Per Section 83E.3.4.1, IEEE 802.3bm					
Receiver						
Signaling rate per lane		25.78125 ± 100ppm			Gb/s	
Differential data output swing	Vout,pp	100		400	mVpp	2
		300		600		
		400	600	800		
		600		1200		
Eye width		0.57			UI	
Eye height, differential		228			mV	
Vertical eye closure	VEC	5.5			dB	
Transition time (20% to 80%)	tr, tf	12			ps	

Notes:

1. Maximum total power value is specified across the full temperature and voltage range.
2. Output voltage is settable in 4 discrete ranges via I2C. Default range is Range 2 (400 – 800 mV).

Optical Characteristics

Parameter	Symbol	λ1	λ2	λ3	λ4	Unit	Notes
Transmitter							
Signaling Speed per Lane			25.78125 ± 100ppm			Gb/s	1
Lane center wavelengths (range)	λ	850	880	910	940	nm	
RMS Spectral Width	SW	0.59	0.59	0.59	0.59	nm	
Tx_{OMA} min at max TDEC		-3	-3	-3	-2.9	dBm	
TDEC (OM3)	TDEC	3.3	3.5	3.7	4.2	dB	
Tx_{OMA} - TDEC	P-TDEC	-6.3	-6.5	-6.7	-7.1	dBm	
Tx_{OMA} min	TxOMA	-5.5	-5.5	-5.5	-5.5	dBm	
Relative Intensity Noise	RIN		-130			dB/Hz	2
Optical Extinction Ratio	ER	2	2	2	2	dB	
Optical Return Loss Tolerance	ORL		12			dB	
Average launch power of OFF transmitter, per lane			-30			dBm	
Transmitter eye mask definition {X1, X2, X3, Y1, Y2, Y3}			{0.3,0.38,0.45,0.35,0.41,0.5}				3
Receiver							
Signaling Speed per Lane			25.78125 ± 100ppm			GBd	4
Lane center wavelengths (range)	λ	850	880	910	940	nm	
Damage Threshold	DT	3.8	3.8	3.8	3.8	dBm	
Average Receive Power per Lane (min)	RXPmin	-9.5	-9.4	-9.4	-9.4	dBm	
Average Receive Power per Lane (max)	RXPmax	3.4	3.4	3.4	3.4	dBm	
Receiver Reflectance (max)	Rfl		-12			dB	
Stressed Receiver Sensitivity (OMA) per Lane	SRS	-5.2	-5.2	-5.2	-5.2	dBm	5
Back to Back Receiver Sensitivity (OMA) per Lane	RxSens	-8.2	-8.4	-8.6	-8.8	dBm	6
Stressed Conditions:							
Stressed eye closure	SEC	3.3	3.5	3.7	4.2	dB	
Stressed eye J2 jitter	J2		0.39			UI	
Stressed eye J4 jitter	J4		0.53			UI	
Stressed Receiver Eye Mask Definition {X1, X2, X3, Y1, Y2, Y3}			{0.28,0.5,0.5,0.33,0.33,0.4}				7
LOS De-Assert (max)	LOSD		-11			dBm	8
LOS Assert (min)	LOSA		-30			dBm	8
LOS Hysteresis			0.5			dB	

Notes:

1. Transmitter consists of 4 lasers and a 4:1 optical multiplexer.
2. Informative, link controlled by TDEC
3. Hit Ratio 1.5 x 10^{-3} hits/sample.
4. Receiver consists of a 1:4 optical de-multiplexer and 4 photodetectors.
5. 5 x 10^{-5} BER (pre-FEC).
6. Unstressed receiver sensitivity is information and assumes 5 x 10^{-5} BER (pre-FEC).
7. Hit Ratio 5 x 10^{-5} hits/sample.
8. DC values.

Link Budget

Parameter	Symbol	Min	Typ	Max	Units	Notes
Bit Rate (all wavelengths combined)	BR		103.10		Gb/s	
Bit Error Rate	BER			$5x10^{-5}$		1
Insertion Loss	IL			1.8	dB	2
Maximum Supported Distances						
Fiber Type						
OM3 MMF	Lmax1			75	m	3
OM4 MMF	Lmax2			100	m	3
OM5 MMF	Lmax3			150	m	3

Notes:

1. Tested with a 2^{31} – 1 PRBS at 25.78125 Gb/s
2. 850 nm channel can tolerate 1.9 dB insertion loss
3. Specified at 103.1Gb/s. Requires RS-FEC on the host to support maximum distance.

Pin Descriptions

Pin	Logic	Symbol	Name/Descriptions	Ref.
1		GND	Module Ground	1
2	CML-I	Tx2-	Transmitter inverted data input	
3	CML-I	Tx2+	Transmitter non-inverted data input	
4		GND	Module Ground	1
5	CML-I	Tx4-	Transmitter inverted data input	
6	CML-I	Tx4+	Transmitter non-inverted data input	
7		GND	Module Ground	1
8	LVTTL-I	MODSEIL	Module Select	2
9	LVTTL-I	ResetL	Module Reset	2
10		VCCRx	+3.3v Receiver Power Supply	
11	LVCMOS-I	SCL	2-wire Serial interface clock	2
12	LVCMOS-I/O	SDA	2-wire Serial interface data	2
13		GND	Module Ground	1
14	CML-O	RX3+	Receiver non-inverted data output	
15	CML-O	RX3-	Receiver inverted data output	
16		GND	Module Ground	1
17	CML-O	RX1+	Receiver non-inverted data output	
18	CML-O	RX1-	Receiver inverted data output	
19		GND	Module Ground	1
20		GND	Module Ground	1
21	CML-O	RX2-	Receiver inverted data output	
22	CML-O	RX2+	Receiver non-inverted data output	
23		GND	Module Ground	1
24	CML-O	RX4-	Receiver inverted data output	
25	CML-O	RX4+	Receiver non-inverted data output	
26		GND	Module Ground	1
27	LVTTL-O	ModPrsL	Module Present, internal pulled down to GND	
28	LVTTL-O	IntL	Interrupt output should be pulled up on host board	2
29		VCCTx	+3.3v Transmitter Power Supply	
30		VCC1	+3.3v Power Supply	
31	LVTTL-I	LPMode	Low Power Mode	2
32		GND	Module Ground	1
33	CML-I	Tx3+	Transmitter non-inverted data input	
34	CML-I	Tx3-	Transmitter inverted data input	
35		GND	Module Ground	1
36	CML-I	Tx1+	Transmitter non-inverted data input	
37	CML-I	Tx1-	Transmitter inverted data input	
38		GND	Module Ground	1

Notes:

1. Module circuit ground is isolated from module chassis ground with in the module.
2. Open collector; should be pulled up with 4.7k-10k ohms on host board to a voltage between 3.15V and 3.6V.

Electrical Pin-out Details

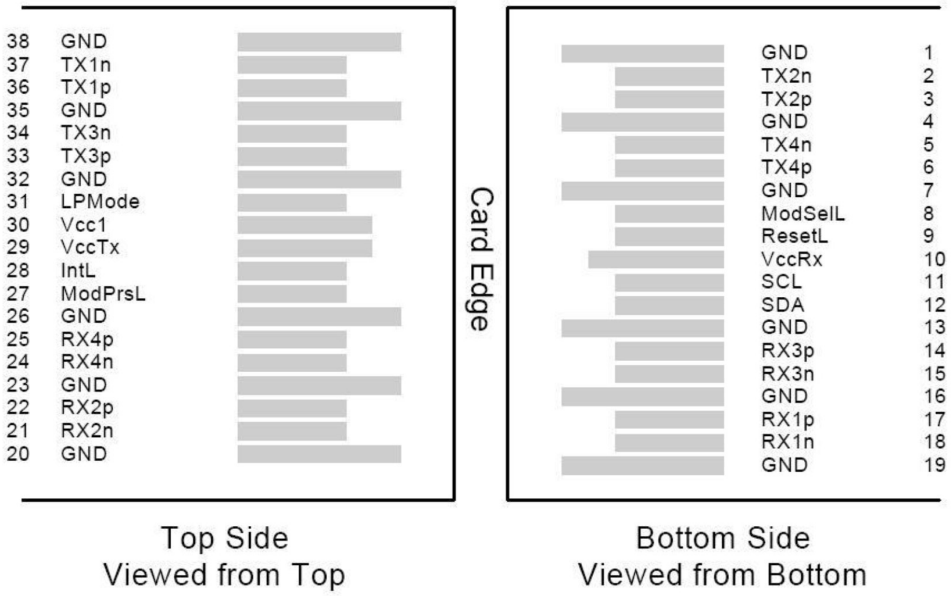

Mechanical Specifications

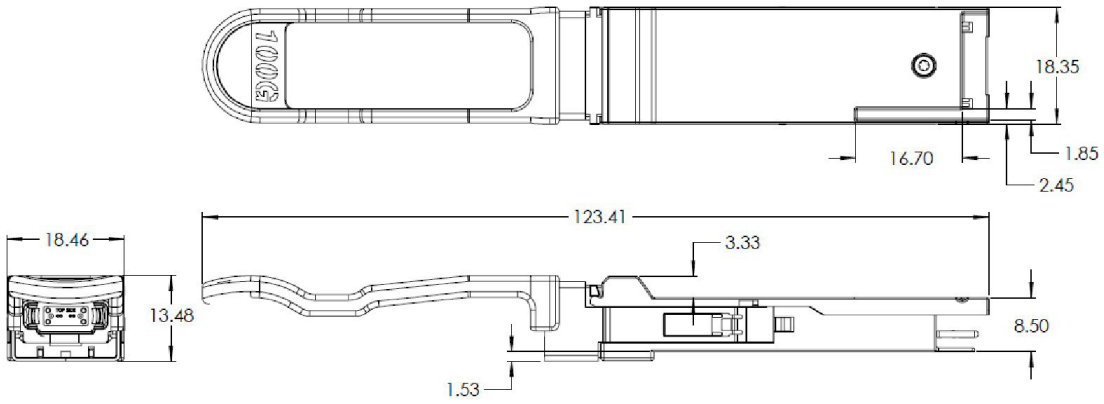

About ProLabs

Our extensive experience comes as standard. For over 20 years ProLabs has delivered optical connectivity solutions that give our customers freedom and choice through our ability to provide seamless interoperability. At the heart of our company is the ability to provide state-of-the-art optical transport and connectivity solutions that are compatible with more than 100 optical switching and transport platforms.

A Complete Portfolio of Network Solutions

ProLabs is focused on innovations in optical transport and connectivity. The combination of our knowledge of optics and networking equipment enables ProLabs to be your single source for optical transport and connectivity solutions from 100Mb to 1.6T while providing innovative solutions that increase network efficiency. We provide the optical connectivity expertise that is compatible with and enhances your switching and transport equipment.

The Trusted Partner

Customer service is our number one value. ProLabs has invested in people, labs and manufacturing capacity to ensure compatible products, and immediate answers to your questions. With Engineering and Manufacturing offices in the U.K. and U.S. augmented by field offices throughout the U.S., U.K. and Asia, ProLabs is able to be our customers best advocate 24 hours a day.

Contact Information

ProLabs US

Email: sales@prolabs.com
Telephone: 952-852-0252

ProLabs UK

Email: salessupport@prolabs.com
Telephone: +44 1285 719 600