MGBIC-LC03-C

Enterasys MGBIC-LC03 Compatible TAA Compliant 1000Base-MX SFP Transceiver (MMF, 1310nm, 2km, LC)

Features:

- INF-8074 and SFF-8472 Compliance
- Duplex LC Connector
- Fabry Perot transmitter and PIN receiver
- Single-mode Fiber
- Commercial Temperature 0 to 70 Celsius
- Hot Pluggable
- Metal with Lower EMI
- Excellent ESD Protection
- RoHS Compliant and Lead Free

Applications:

- 1000Base Ethernet
- Up to 2km over MMF
- Access and Enterprise

Product Description

This Enterasys MGBIC-LC03 compatible SFP transceiver provides 1000Base-MX throughput up to 2km over multi-mode fiber (MMF) using a wavelength of 1310nm via an LC connector. It is guaranteed to be 100% compatible with the equivalent Enterasys transceiver. This easy to install, hot swappable transceiver has been programmed, uniquely serialized and data-traffic and application tested to ensure that it will initialize and perform identically. It is built to meet or exceed the specifications of Enterasys, as well as to comply with MSA (Multi-Source Agreement) standards to ensure seamless network integration. This transceiver is Trade Agreements Act (TAA) compliant. We stand behind the quality of our products and proudly offer a limited lifetime warranty.

ProLabs' transceivers are RoHS compliant and lead-free.

TAA refers to the Trade Agreements Act (19 U.S.C. & 2501-2581), which is intended to foster fair and open international trade. TAA requires that the U.S. Government may acquire only "U.S.-made or designated country end products.")

Rev. 012026

Absolute Maximum Ratings

Parameter	Symbol	Min.	Max.	Unit
Maximum Supply Voltage	Vcc	-0.5	4.0	V
Storage Temperature	Tstg	-40	85	°C
Operating Case Temperature	Tc	0	70	°C
Operating Humidity	RH	5	85	%
Receiver Power	R_{MAX}		0	dBm
Maximum Bitrate	B_{max}		1.25	Gbps

Electrical Characteristics (Tc=25°C, Vcc=3.3 Volts)

Parameter	Symbol	Min.	Typ.	Max.	Unit	Notes
Power Supply Voltage	Vcc	3.15	3.30	3.43	V	
Power Supply Current	Icc			303	mA	
Power Consumption				1	W	
Transmitter						
Differential Data Input Swing	VIN,pp	120		850	mV	
Input Differential Impedance	ZIN	80	100	120	Ω	
Receiver						
Differential Data Output Swing	VOUT,pp	300		850	mV	
Output Differential Impedance	ZIN	80	100	120	Ω	

Optical Characteristics

Parameter	Symbol	Min.	Typ.	Max.	Unit	Notes
Transmitter						
Optical Power (Average)	P_{AVE}	-9.5		-3	dBm	1
Optical Extinction Ratio	ER	9			dB	
Optical Wavelength	Tλ	1270	1310	1355	nm	
Insertion Loss	IL		0.6			
Receiver						
Receiver Sensitivity (Average)	R_{AVE}			-24	dBm	3
Receiver Overload	P_{max}	0			dBm	4
Optical Return Loss	ORL	12			dB	
Receiver Wavelength	Rλ	1260		1565	nm	

Notes:

1. Coupled into a single-mode fiber.
2. Per IEEE 802.3ah specification.
3. Average power, back-to-back, @1.25Gbps, BER $1E^{-12}$, and PRBS 2^{31}-1.
4. Exceeding the Receiver Overload can physically damage the module. Please use appropriate attenuation.

Pin Descriptions

Pin	Symbol	Name/Description	Notes
1	VeeT	Transmitter Ground (Common with Receiver Ground).	1
2	Tx_Fault	Transmitter Fault. Not Supported.	
3	Tx_Disable	Transmitter Disable. Laser output disabled on “high” or “open.”	2
4	MOD_DEF (2)	Module Definition 2. Data Line for Serial ID.	3
5	MOD_DEF (1)	Module Definition 1. Clock Line for Serial ID.	3
6	MOD_DEF (0)	Module Definition 0. Grounded within the module.	3
7	Rate Select	No Connection Required.	
8	LOS	Loss of Signal Indication. “Logic 0” indicates normal operation.	4
9	VeeR	Receiver Ground (Common with Transmitter Ground).	1
10	VeeR	Receiver Ground (Common with Transmitter Ground).	1
11	VeeR	Receiver Ground (Common with Transmitter Ground).	1
12	RD-	Receiver Inverted Data Out. AC Coupled.	
13	RD+	Receiver Non-Inverted Data Out. AC Coupled.	
14	VeeR	Receiver Ground (Common with Transmitter Ground).	1
15	VccR	Receiver Power Supply.	
16	VccT	Transmitter Power Supply.	
17	VeeT	Transmitter Ground (Common with Receiver Ground).	1
18	TD+	Transmitter Non-Inverted Data In. AC Coupled.	
19	TD-	Transmitter Inverted Data In. AC Coupled.	
20	VeeT	Transmitter Ground (Common with Receiver Ground).	1

Notes:

1. The circuit ground is isolated from the chassis ground.
2. Disabled: T_{DIS}>2V or Open, Enabled: T_{DIS}<0.8V.
3. Should be pulled up with 4.7kΩ to 10kΩ on the host board to a voltage between 2V and 3.6V.
4. LOS is an open collector output.

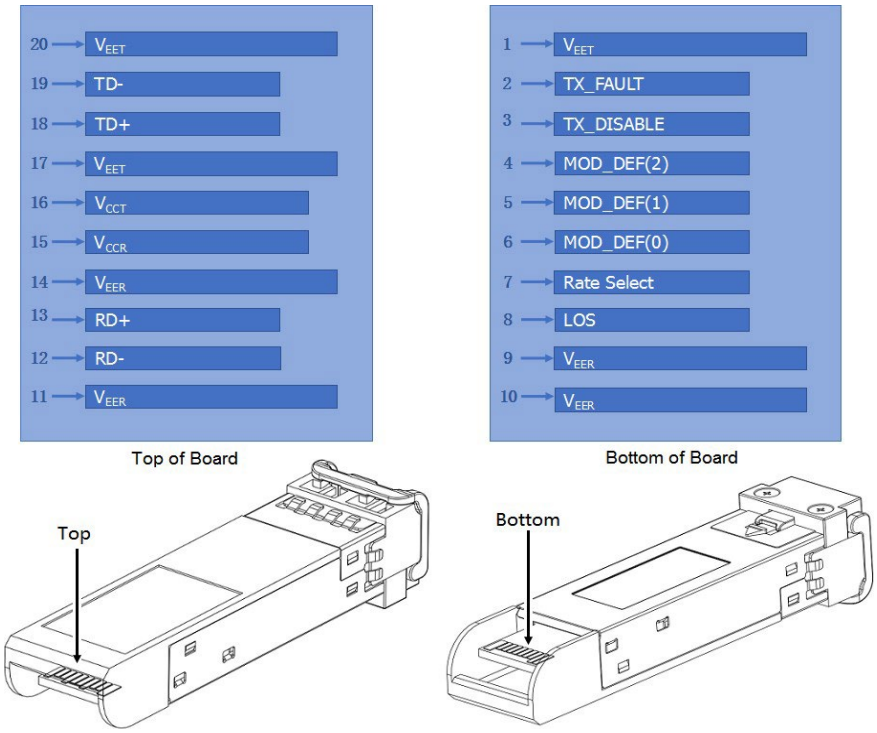

Pin-Out of Connector Block on the Host Board

Recommended Circuit Schematic

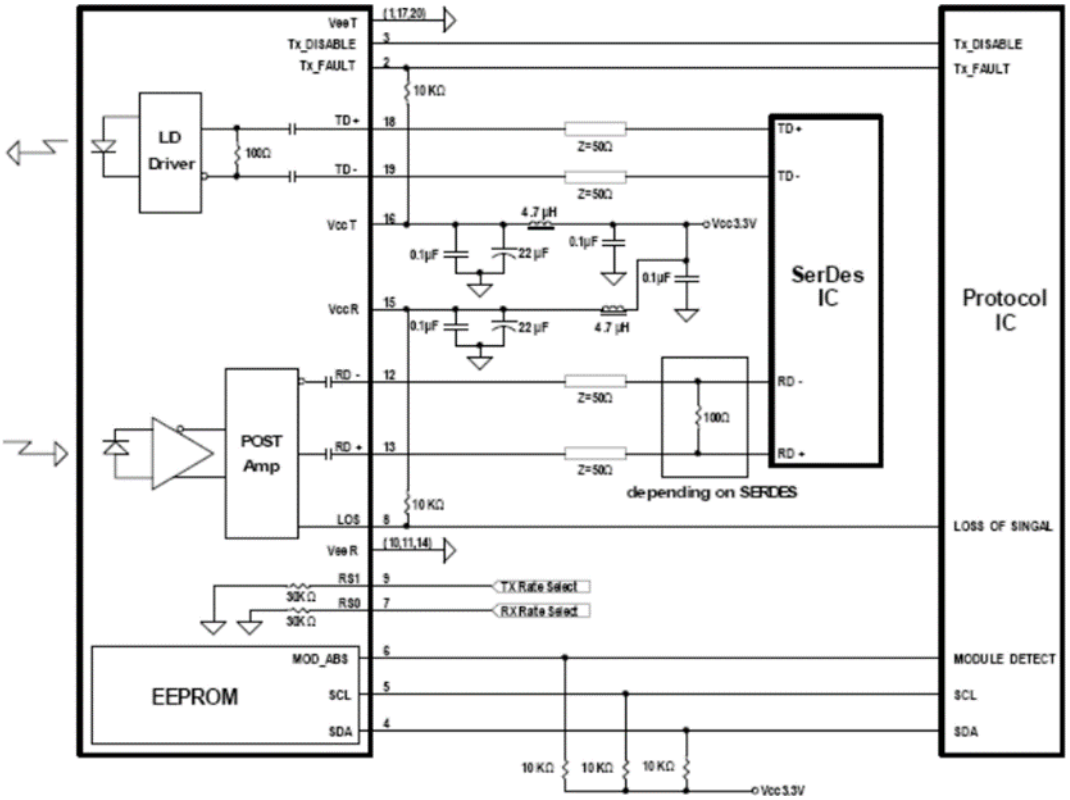

Mechanical Specifications

Small Form Factor Pluggable (SFP) transceivers are compatible with the dimensions defined by the SFP Multi-Sourcing Agreement (MSA).

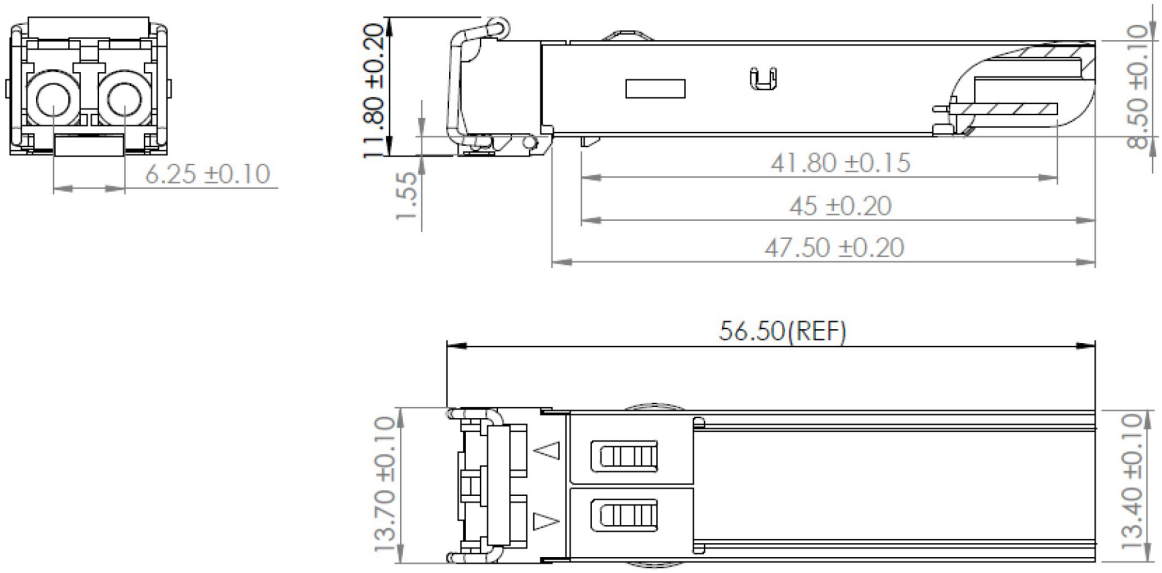

EEPROM Information

EEPROM memory map-specific data field description is as below:

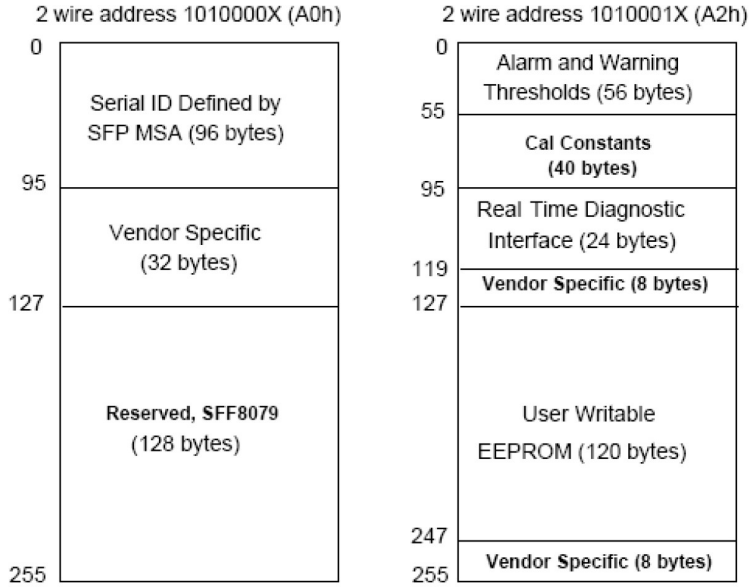

About ProLabs

Our extensive experience comes as standard. For over 20 years ProLabs has delivered optical connectivity solutions that give our customers freedom and choice through our ability to provide seamless interoperability. At the heart of our company is the ability to provide state-of-the-art optical transport and connectivity solutions that are compatible with more than 100 optical switching and transport platforms.

A Complete Portfolio of Network Solutions

ProLabs is focused on innovations in optical transport and connectivity. The combination of our knowledge of optics and networking equipment enables ProLabs to be your single source for optical transport and connectivity solutions from 100Mb to 1.6T while providing innovative solutions that increase network efficiency. We provide the optical connectivity expertise that is compatible with and enhances your switching and transport equipment.

The Trusted Partner

Customer service is our number one value. ProLabs has invested in people, labs and manufacturing capacity to ensure compatible products, and immediate answers to your questions. With Engineering and Manufacturing offices in the U.K. and U.S. augmented by field offices throughout the U.S., U.K. and Asia, ProLabs is able to be our customers best advocate 24 hours a day.

Contact Information

ProLabs US

Email: sales@prolabs.com
Telephone: 952-852-0252

ProLabs UK

Email: salessupport@prolabs.com
Telephone: +44 1285 719 600