MA-QSFP-40G-SR-BD-C

Cisco Meraki® MA-QSFP-40G-SR-BD Compatible TAA Compliant 40GBase-SR QSFP+ Transceiver (MMF, 832nm to 918nm, 150m, LC)

Features:

- SFF-8436 Compliance
- Duplex LC Connector
- Multi-mode Fiber
- Commercial Temperature 0 to 70 Celsius
- Hot Pluggable
- Metal with Lower EMI
- Excellent ESD Protection
- RoHS Compliant and Lead Free

Applications:

- 40GBase Ethernet
- Access and Enterprise

Product Description

This Cisco Meraki® MA-QSFP-40G-SR-BD compatible QSFP+ transceiver provides 40GBase-SR throughput up to 150m over multi-mode fiber (MMF) using a wavelength of 832nm to 918nm via an LC connector. It is guaranteed to be 100% compatible with the equivalent Cisco Meraki® transceiver. This easy to install, hot swappable transceiver has been programmed, uniquely serialized and data-traffic and application tested to ensure that it will initialize and perform identically. It is built to meet or exceed the specifications of Cisco Meraki®, as well as to comply with MSA (Multi-Source Agreement) standards to ensure seamless network integration. This transceiver is Trade Agreements Act (TAA) compliant. We stand behind the quality of our products and proudly offer a limited lifetime warranty.

ProLabs' transceivers are RoHS compliant and lead-free.

TAA refers to the Trade Agreements Act (19 U.S.C. & 2501-2581), which is intended to foster fair and open international trade. TAA requires that the U.S. Government may acquire only "U.S.-made or designated country end products."

Rev. 062326

Absolute Maximum Ratings

Parameter	Symbol	Min.	Max.	Unit	Notes
Storage Temperature	Tstg	-40	+85	°C	
Relative Humidity – Storage	RHs	0	85	%	1
Relative Humidity – Operating	RHo	0	85	%	1
Module Supply Voltage	Vcc	-0.5	3.6	V	

Notes:

1. RH is a non-condensing condition.
2. Exceeding the Absolute Maximum Ratings may cause irreversible damage to the device. The device is not intended to be operated under the condition of simultaneous Absolute Maximum Ratings, a condition which may cause irreversible damage to the device.

Recommended Operating Conditions

Parameter	Symbol	Min.	Typ.	Max.	Unit	Notes
Operating Case Temperature	Tc	0	25	70	°C	1
Module Supply Voltage	Vcc	3.135	3.3	3.465	V	
Power Consumption	P			3.5	W	2

Notes:

1. Temperature range = C.

Electrical Characteristics

Parameter	Symbol	Min.	Typ.	Max.	Unit	Notes
Transmitter (Host Rx)						
Signaling Rate	SR		10.3125		Gbps	
Tx_Data Differential Input Voltage	VIN	200		900	mV	
Tx_Data Differential Input Impedance	ZIN		100		Ω	
Receiver (Host Tx)						
Signaling Rate	SR		10.3125		Gbps	1
Rx_Data Differential Output Voltage	VOUT	800		1200	mV	
Rx_Data Differential Output Impedance	ZOUT		100		Ω	

Optical Characteristics

Parameter	Symbol	Min.	Typ.	Max.	Unit	Notes
Transmitter						
Signaling Rate Per Lane (Range)	Sr		10.3125		Gbps	
Laser Type			VCSEL			
Lane Wavelength 1 (Range)	λ	840	850	865	nm	
Lane Wavelength 2 (Range)	λ	900	908	918	nm	
Average Launch Power Per Lane	Pout	-6		4.0	dBm	
Outer Optical Modulation Amplitude (OMAouter) Per Lane	Tx_OMA	-4.2		3	dBm	
Average Launch Power of Off Transmitter Per Lane	Poff			-30	dBm	
Extinction Ratio Per Lane	ER	3			dB	
20.625 Gbps Eye Mask: X1, X2, X3, Y1, Y2, Y3			{0.3, 0.38, 0.45, 0.35, 0.41, 0.5}		dB	1
Receiver						
Signaling Rate Per Lane (Range)	Sr		10.3125		Gbps	
Lane Wavelength 1 (Range)	λ	840	850	865	nm	
Lane Wavelength 2 (Range)	λ	900	908	918	nm	
Receiver Sensitivity (OMAouter) Per Lane	SEN			-7.1	dBm	
Average Receiver Power Per Lane	Pin	-8.2		4	dBm	2
Damage Threshold Per Lane		5			dBm	3

Notes:

1. Hit Ratio = 1.5×10^{-3}; TP1 Tx input electrical signal is 10.3125Gbos, pattern 2^9-1.
2. NRZ Signaling Rate Per Lane 10.3125Gbps and PRBS 2^{31}-1, BER< $1E^{-6}$.
3. A receiver power below this value cannot be compliant; however, a value above does not ensure compliance.

Pin Descriptions

Pin	Symbol	Name/Description
1	GND	Module Ground.
2	Tx2n	Transmitter Inverted Data Input.
3	Tx2p	Transmitter Non-Inverted Data Input.
4	GND	Module Ground.
5	Tx4n	Transmitter Inverted Data Input.
6	Tx4p	Transmitter Non-Inverted Data Input.
7	GND	Module Ground.
8	ModSelL	Module Select.
9	ResetL	Module Reset.
10	VccRx	+3.3V Receiver DC Power Supply.
11	SCL	I2C Serial Clock.
12	SDA	I2C Serial Data.
13	GND	Module Ground.
14	Rx3p	Receiver Non-Inverted Data Output.
15	Rx3n	Receiver Inverted Data Output.
16	GND	Module Ground.
17	Rx1p	Receiver Non-Inverted Data Output.
18	Rx1n	Receiver Inverted Data Output.
19	GND	Module Ground.
20	GND	Module Ground.
21	Rx2n	Receiver Inverted Data Output.
22	Rx2p	Receiver Non-Inverted Data Output.
23	GND	Module Ground.
24	Rx4n	Receiver Inverted Data Output.
25	Rx4p	Receiver Non-Inverted Data Output.
26	GND	Module Ground.
27	ModPrsL	Module Present.
28	IntL	Interrupt.
29	VccTx	+3.3V Transmitter DC Power Supply.
30	Vcc1	+3.3V DC Power Supply.
31	LPMode	Low-Power Mode.
32	GND	Module Ground.
33	Tx3p	Transmitter Non-Inverted Data Input.
34	Tx3n	Transmitter Inverted Data Input.

35	GND	Module Ground.
36	Tx1p	Transmitter Non-Inverted Data Input.
37	Tx1n	Transmitter Inverted Data Input.
38	GND	Module Ground.

Electrical Pin-Out Details

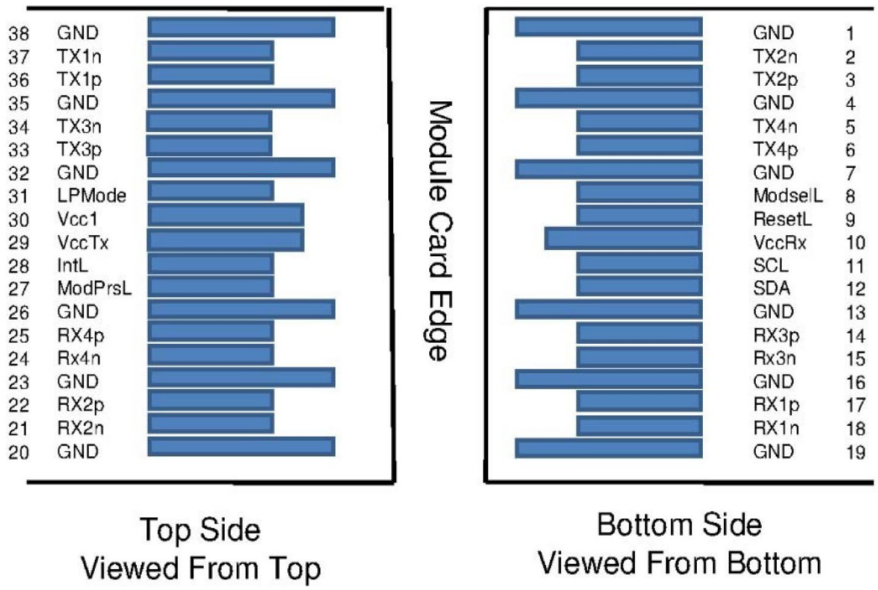

Block Diagram

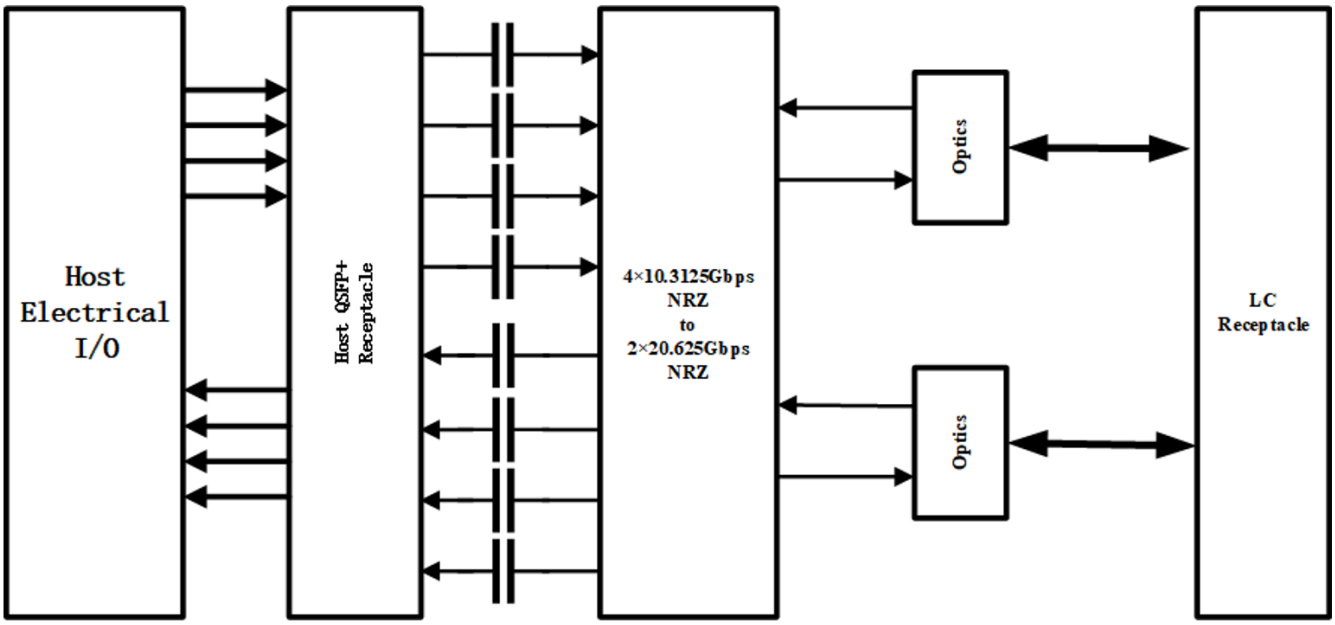

Mechanical Specifications

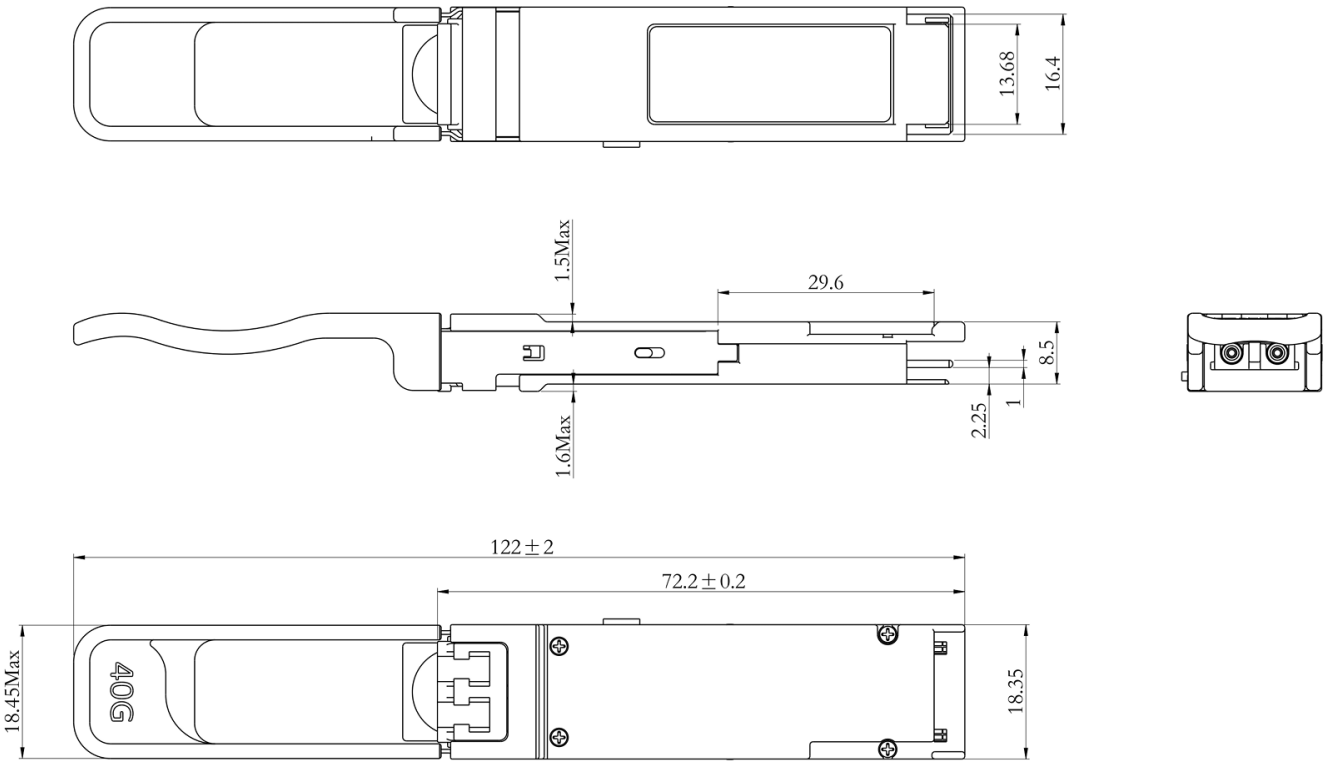

Notes:

1. Tolerance: ±0.1mm.
2. Others according with SFF-8661 MSA or customer spec.
3. Light port according with Fiber Connector Specifications.

Optical Lane Assignment

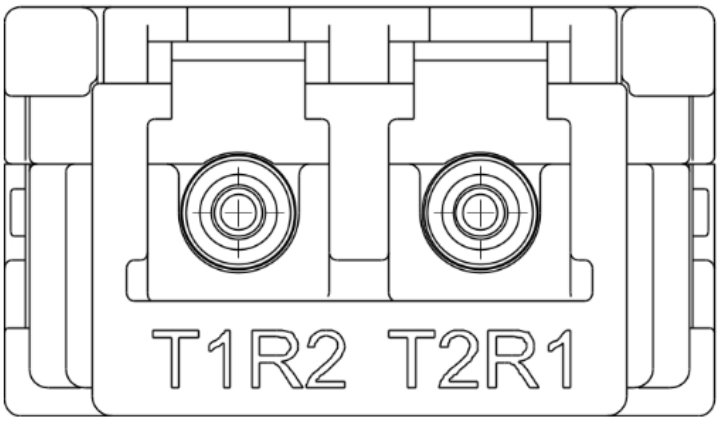

About ProLabs

Our extensive experience comes as standard. For over 20 years ProLabs has delivered optical connectivity solutions that give our customers freedom and choice through our ability to provide seamless interoperability. At the heart of our company is the ability to provide state-of-the-art optical transport and connectivity solutions that are compatible with more than 100 optical switching and transport platforms.

A Complete Portfolio of Network Solutions

ProLabs is focused on innovations in optical transport and connectivity. The combination of our knowledge of optics and networking equipment enables ProLabs to be your single source for optical transport and connectivity solutions from 100Mb to 1.6T while providing innovative solutions that increase network efficiency. We provide the optical connectivity expertise that is compatible with and enhances your switching and transport equipment.

The Trusted Partner

Customer service is our number one value. ProLabs has invested in people, labs and manufacturing capacity to ensure compatible products, and immediate answers to your questions. With Engineering and Manufacturing offices in the U.K. and U.S. augmented by field offices throughout the U.S., U.K. and Asia, ProLabs is able to be our customers best advocate 24 hours a day.

Contact Information

ProLabs US

Email: sales@prolabs.com
Telephone: 952-852-0252

ProLabs UK

Email: salessupport@prolabs.com
Telephone: +44 1285 719 600