JL274A-C

HP® JL274A Compatible TAA 100GBase-SR4 QSFP28 Transceiver (MMF, 850nm, 100m, MPO, DOM)

Features:

- SFF-8665 Compliance
- MPO Connector
- Multi-mode Fiber
- Commercial Temperature 0 to 70 Celsius
- Hot Pluggable
- Metal with Lower EMI
- Excellent ESD Protection
- RoHS Compliant and Lead Free

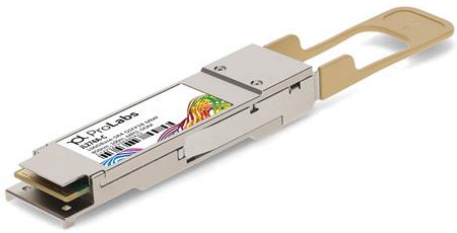

Applications:

- 100GBase Ethernet
- Access and Enterprise

Product Description

This HP® JL274A compatible QSFP28 transceiver provides 100GBase-SR4 throughput up to 100m over OM4 multi-mode fiber (MMF) using a wavelength of 850nm via an MPO connector. Our transceiver is built to meet or exceed OEM specifications and is guaranteed to be 100% compatible with HP®. It has been programmed, uniquely serialized, and tested for data-traffic and application to ensure that it will initialize and perform identically. All of our transceivers comply with Multi-Source Agreement (MSA) standards to provide seamless network integration. Additional product features include Digital Optical Monitoring (DOM) support which allows access to real-time operating parameters. This transceiver is Trade Agreements Act (TAA) compliant. We stand behind the quality of our products and proudly offer a limited lifetime warranty.

ProLabs' transceivers are RoHS compliant and lead-free.

TAA refers to the Trade Agreements Act (19 U.S.C. & 2501-2581), which is intended to foster fair and open international trade. TAA requires that the U.S. Government may acquire only "U.S.-made or designated country end products.")

Rev. 012026

Absolute Maximum Ratings

Parameter	Symbol	Min.	Typ.	Max.	Unit	Notes
Maximum Supply Voltage	Vcc	-0.5		4.0	V	
Storage Temperature	T_S	-40		+85	°C	
Relative Humidity	RH	5		95	%	
Operating Case Temperature	T_C	0	25	70	°C	
Data Rate PER Channel	DR		25.78125		Gb/s	

Electrical Characteristics

Parameter	Symbol	Min.	Typ.	Max.	Unit	Notes
Supply Voltage	V_{CC}	3.135	3.3	3.465	V	
Module Supply Current	Icc			750	mA	
Power Dissipation	P_D			2.5	W	
Transmitter						
Input Differential Impedance	ZIN		100		Ω	
Differential Data Input Swing	$V_{IN, P-P}$	180		900	mVp-p	
Receiver						
Output Differential Impedance	Zo		100		Ω	
Differential Data Output Swing	$V_{OUT, P-P}$	300		850	mVp-p	1
Transition Time (20% to 80%)	Tr,Tf	12			ps	

Notes:

1. The optical power is launched into OM3 MMF.
2. Measured with a PRBS 2^{31}-1 test pattern @25.78125Gbps.

Optical Characteristics

Parameter	Symbol	Min.	Typ.	Max.	Unit.	Notes
Transmitter						
Launch Optical Power	Po	-8.4		+2.4	dBm	1
Center Wavelength Range	λc	840	850	860	nm	-
Extinction Ratio	EX	2			dB	2
Spectral width (RMS)	Δλ			0.6	nm	
Transmitter and Dispersion Penalty	TDP			4.3	dB	
Optical Return Loss Tolerance	ORLT			12	dB	
Eye Diagram	IEEE Std 802.3bm compatible					
Receiver						
Center Wavelength	λc	840	850	860	nm	
Average Receiver Sensitivity (P_{avg})	S			-11	dBm	3
Average Receiver Sensitivity (P_{avg})	S			-7.5	dBm	4
Receiver Overload (P_{avg})	P_{OL}	2.5			dBm	
Damage Threshold	P_{OL}	3.4			dBm	
Optical Reflectance	ORL			-12	dB	
LOS Assert	LOS_A	-30			dB	
LOS De-Assert	LOS_D			-11.5	dB	
LOS Hysteresis		0.5			dB	

Notes:

1. The optical power is launched into OM3 MMF.
2. Measured with a PRBS 2^{31}-1 test pattern @25.78125Gbps.
3. Measured with a PRBS 2^{31}-1 test pattern, 25.78125Gb/s, BER<$5E^{-5}$.
4. Measured with PRBS 2^{31}-1 test pattern, 25.78125Gb/s, BER<10^{-12}.

Pin Descriptions

Pin	Symbol	Function/Description	Notes
1	GND	Transmitter Ground (Common with Receiver Ground)	1
2	Tx2-	Transmitter Inverted Data Input	
3	Tx2+	Transmitter Non-Inverted Data output	
4	GND	Transmitter Ground (Common with Receiver Ground)	1
5	Tx4-	Transmitter Inverted Data Input	
6	Tx4+	Transmitter Non-Inverted Data output	
7	GND	Transmitter Ground (Common with Receiver Ground)	1
8	ModSelL	Module Select	2
9	ResetL	Module Reset	2
10	VccRx	3.3V Power Supply Receiver	
11	SCL	2-Wire serial Interface Clock	2
12	SDA	2-Wire serial Interface Data	2
13	GND	Transmitter Ground (Common with Receiver Ground)	1
14	Rx3+	Receiver Non-Inverted Data Output	
15	Rx3-	Receiver Inverted Data Output	
16	GND	Transmitter Ground (Common with Receiver Ground)	1
17	Rx1+	Receiver Non-Inverted Data Output	
18	Rx1-	Receiver Inverted Data Output	
19	GND	Transmitter Ground (Common with Receiver Ground)	1
20	GND	Transmitter Ground (Common with Receiver Ground)	1
21	Rx2-	Receiver Inverted Data Output	
22	Rx2+	Receiver Non-Inverted Data Output	
23	GND	Transmitter Ground (Common with Receiver Ground)	1
24	Rx4-	Receiver Inverted Data Output	1
25	Rx4+	Receiver Non-Inverted Data Output	
26	GND	Transmitter Ground (Common with Receiver Ground)	1
27	ModPrsl	Module Present	
28	IntL	Interrupt	2
29	VccTx	3.3V power supply transmitter	
30	Vcc1	3.3V power supply	
31	LPMode	Low Power Mode	2
32	GND	Transmitter Ground (Common with Receiver Ground)	1
33	Tx3+	Transmitter Non-Inverted Data Input	
34	Tx3-	Transmitter Inverted Data Output	

35	GND	Transmitter Ground (Common with Receiver Ground)	1
36	Tx1+	Transmitter Non-Inverted Data Input	
37	Tx1-	Transmitter Inverted Data Output	
38	GND	Transmitter Ground (Common with Receiver Ground)	1

Notes:

1. The module signal grounds are isolated from the module case.
2. This is an open collector/drain output that on the host board requires a 4.7KΩ to 10KΩ pull-up resistor to VccHost.

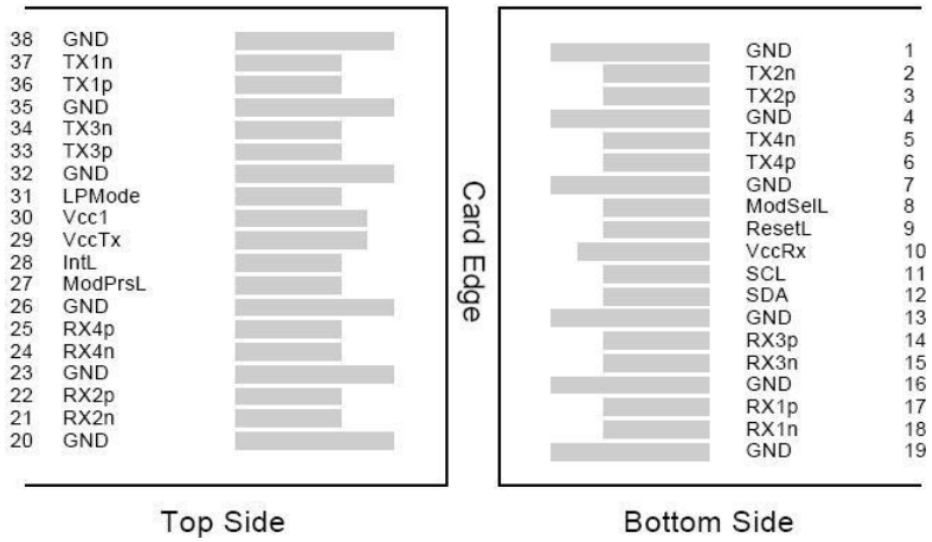

Recommended Host Board Power Supply Filter Network

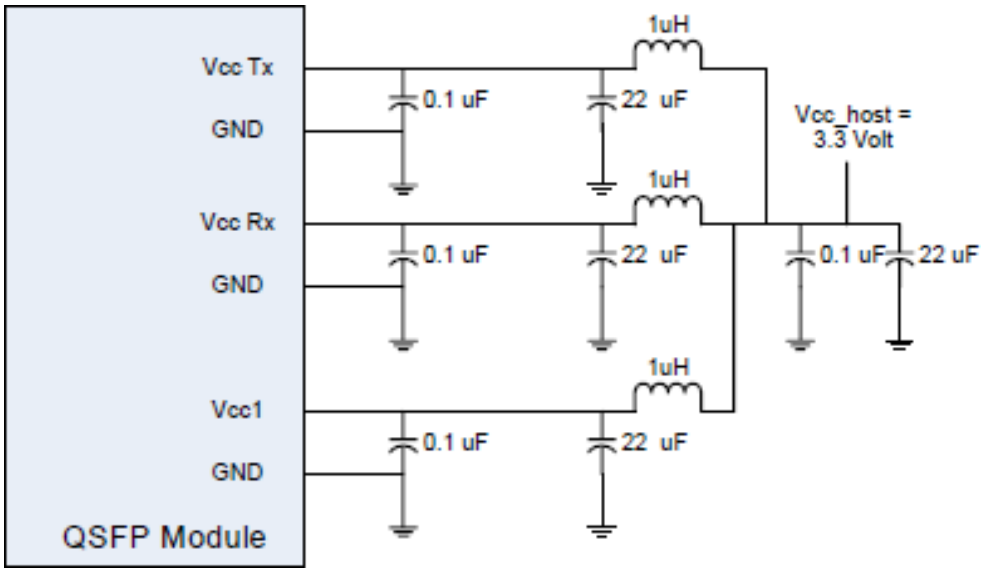

Recommended Application Interface Block Diagram

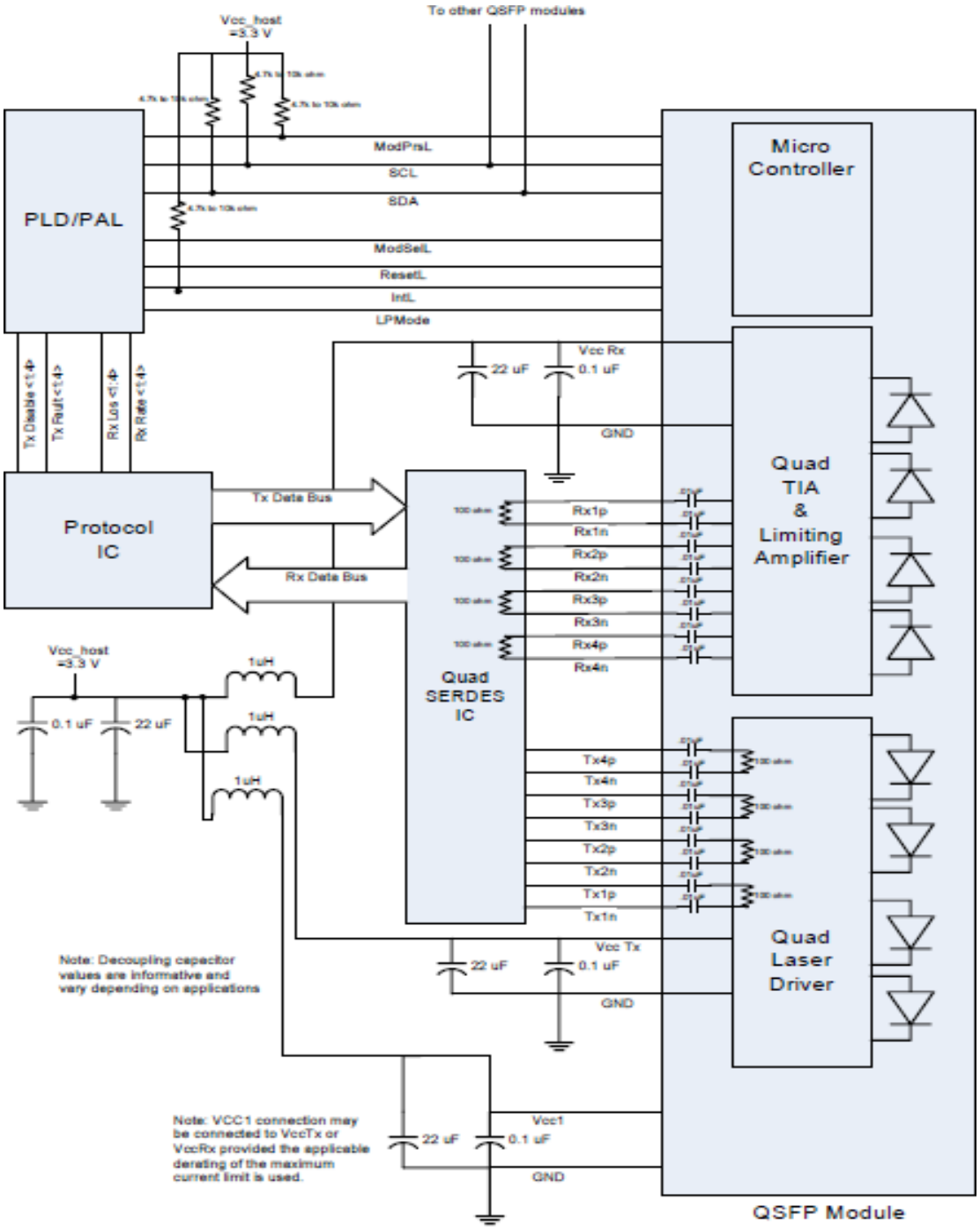

Mechanical Specifications

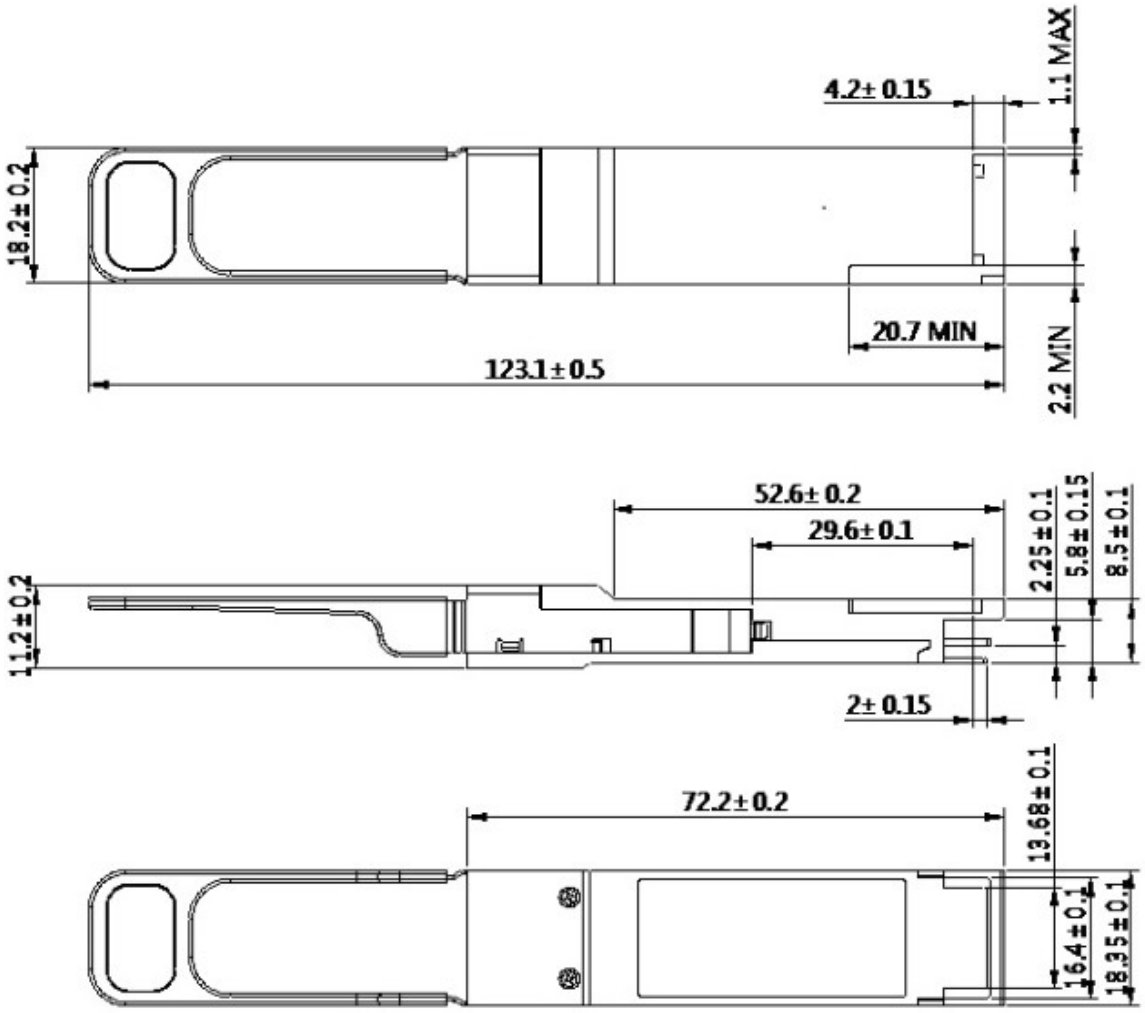

About ProLabs

Our extensive experience comes as standard. For over 20 years ProLabs has delivered optical connectivity solutions that give our customers freedom and choice through our ability to provide seamless interoperability. At the heart of our company is the ability to provide state-of-the-art optical transport and connectivity solutions that are compatible with more than 100 optical switching and transport platforms.

A Complete Portfolio of Network Solutions

ProLabs is focused on innovations in optical transport and connectivity. The combination of our knowledge of optics and networking equipment enables ProLabs to be your single source for optical transport and connectivity solutions from 100Mb to 1.6T while providing innovative solutions that increase network efficiency. We provide the optical connectivity expertise that is compatible with and enhances your switching and transport equipment.

The Trusted Partner

Customer service is our number one value. ProLabs has invested in people, labs and manufacturing capacity to ensure compatible products, and immediate answers to your questions. With Engineering and Manufacturing offices in the U.K. and U.S. augmented by field offices throughout the U.S., U.K. and Asia, ProLabs is able to be our customers best advocate 24 hours a day.

Contact Information

ProLabs US

Email: sales@prolabs.com
Telephone: 952-852-0252

ProLabs UK

Email: salessupport@prolabs.com
Telephone: +44 1285 719 600