FTL410QD4C-C

Finisar® FTL410QD4C Compatible TAA 40GBase-eSR4 QSFP+ Transceiver (MMF, 850nm, 400m, MPO, DOM)

Features:

- SFF-8436 Compliance
- MPO Connector
- Multi-mode Fiber
- Commercial Temperature 0 to 70 Celsius
- Hot Pluggable
- Metal with Lower EMI
- Excellent ESD Protection
- RoHS Compliant and Lead Free

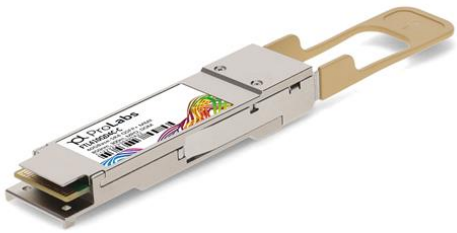

Applications:

- 40GBase Ethernet
- 4x10G Breakout Option
- Access and Enterprise

Product Description

This Finisar® FTL410QD4C compatible QSFP+ transceiver provides 40GBase-SR4 throughput up to 400m over multi-mode fiber (MMF) using a wavelength of 850nm via an MPO connector. It is guaranteed to be 100% compatible with the equivalent Finisar® transceiver. This easy to install, hot swappable transceiver has been programmed, uniquely serialized and data-traffic and application tested to ensure that it will initialize and perform identically. Digital optical monitoring (DOM) support is also present to allow access to real-time operating parameters. This transceiver is Trade Agreements Act (TAA) compliant. We stand behind the quality of our products and proudly offer a limited lifetime warranty.

ProLabs' transceivers are RoHS compliant and lead-free.

TAA refers to the Trade Agreements Act (19 U.S.C. & 2501-2581), which is intended to foster fair and open international trade. TAA requires that the U.S. Government may acquire only "U.S.-made or designated country end products.")

Rev. 012026

Absolute Maximum Ratings

Parameter	Symbol	Min.	Typ.	Max.	Unit
Maximum Supply Voltage	Vcc	-0.5		4.0	V
Storage Temperature	Ts	-40		85	°C
Case Operating Temperature	Tc	0	25	70	°C
Humidity (non-condensing)	RH	5		95	%
Data Rate per Channel			10.3125		Gbps

Electrical Characteristics (TOP=25°C, Vcc=3.3Volts)

Parameter	Symbol	Min.	Typ.	Max.	Unit	Notes
Power Supply Voltage	Vcc	3.135	3.30	3.465	V	
Power Supply Current	Icc			430	mA	
Power Consumption	P_{DISS}			1.5	W	
Transmitter						
Differential data input swing	Vin,pp	180		900	mV	
Input differential impedance	Zin		100		Ω	
Receiver						
Differential data output swing	Vout, pp	300		850	mV	
Output differential impedance	Zin		100		Ω	

Optical Characteristics

Parameter	Symbol	Min.	Typ.	Max.	Unit	Notes
Transmitter						
Optical Power (average)	P_{AVE}	-7.6		+2.4	dBm	1
Optical Wavelength	Tλ	830	850	860	nm	
Optical Extinction Ratio	ER	3			dB	2
Spectral Width (RMS)	Δλ			0.4	nm	
Optical Return Loss Tolerance	ORLT			12	dB	
Transmitter and Dispersion Penalty	TDP			3.2	dB	
Receiver						
Receiver Sensitivity (average)	R_{AVE}			-9.5	dBm	3
Damage Threshold	Pol	2.5			dBm	3
Receiver wavelength	Rλ	830	850	860	nm	

Notes:

1. The optical power is launched into OM3 MMF.
2. Measured with a PRBS 2^{31}-1 test pattern @10.3125Gbps.
3. Measured with PRBS 2^{31}-1 test pattern, 10.3125Gb/s, BER<10^{-12}.

Pin Descriptions

Pin	Logic	Symbol	Name/Descriptions	Ref.
1		GND	Module Ground	1
2	CML-I	Tx2-	Transmitter inverted data input	
3	CML-I	Tx2+	Transmitter non-inverted data input	
4		GND	Module Ground	1
5	CML-I	Tx4-	Transmitter inverted data input	
6	CML-I	Tx4+	Transmitter non-inverted data input	
7		GND	Module Ground	1
8	LVTTL-I	MODSEIL	Module Select	2
9	LVTTL-I	ResetL	Module Reset	2
10		VCCRx	+3.3v Receiver Power Supply	
11	LVCMOS-I	SCL	2-wire Serial interface clock	2
12	LVCMOS-I/O	SDA	2-wire Serial interface data	2
13		GND	Module Ground	1
14	CML-O	RX3+	Receiver non-inverted data output	
15	CML-O	RX3-	Receiver inverted dta output	
16		GND	Module Ground	1
17	CML-O	RX1+	Receiver non-inverted data output	
18	CML-O	RX1-	Receiver inverted data output	
19		GND	Module Ground	1
20		GND	Module Ground	1
21	CML-O	RX2-	Receiver inverted data output	
22	CML-O	RX2+	Receiver non-inverted data output	
23		GND	Module Ground	1
24	CML-O	RX4-	Receiver inverted data output	
25	CML-O	RX4+	Receiver non-inverted data output	
26		GND	Module Ground	1
27	LVTTL-O	ModPrsL	Module Present, internal pulled down to GND	
28	LVTTL-O	IntL	Interrupt output, should be pulled up on host board	2
29		VCCTx	+3.3v Transmitter Power Supply	
30		VCC1	+3.3v Power Supply	
31	LVTTL-I	LPMode	Low Power Mode	2
32		GND	Module Ground	1
33	CML-I	Tx3+	Transmitter non-inverted data input	

34	CML-I	Tx3-	Transmitter inverted data input	
35		GND	Module Ground	1
36	CML-I	Tx1+	Transmitter non-inverted data input	
37	CML-I	Tx1-	Transmitter inverted data input	
38		GND	Module Ground	1

Notes:

1. Module circuit ground is isolated from module chassis ground with in the module.
2. Open collector; should be pulled up with 4.7k-10k ohms on host board to a voltage between 3.15V and 3.6V.

Electrical Pin-out Details

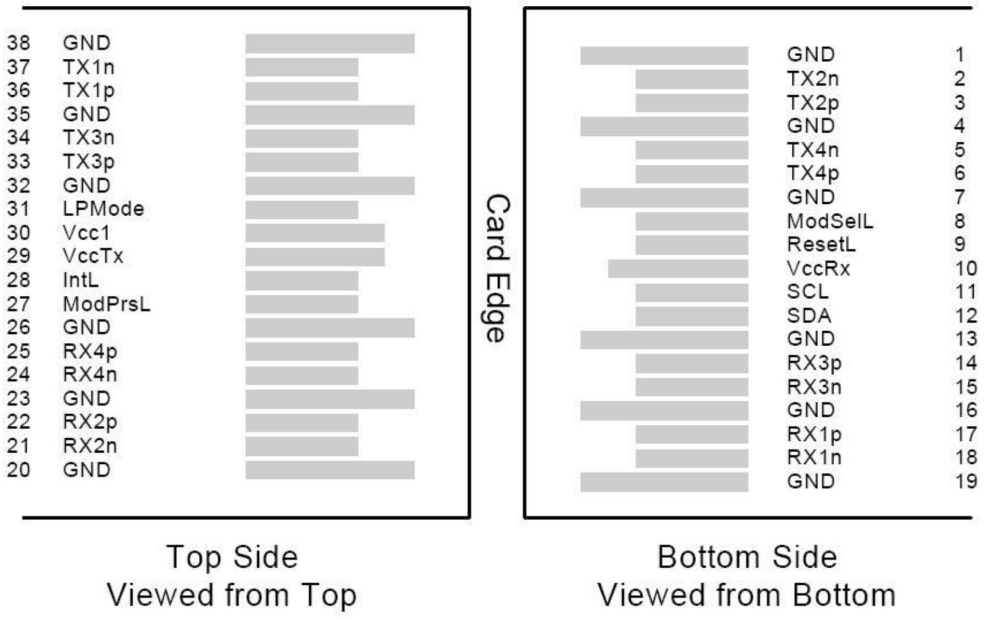

Recommended Host Board Power Supply Filter Network

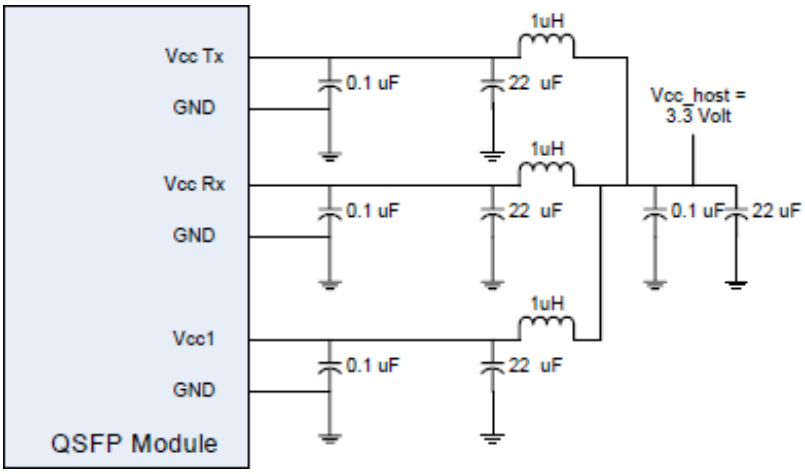

Recommended Application Interface Block Diagram

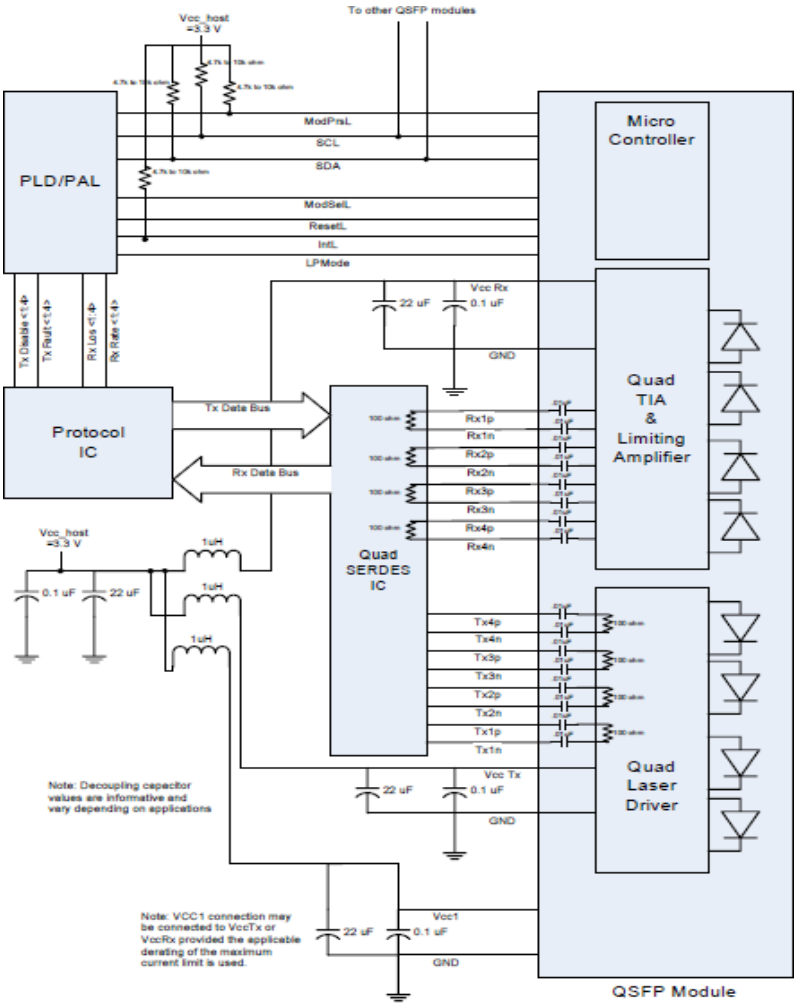

Mechanical Specifications

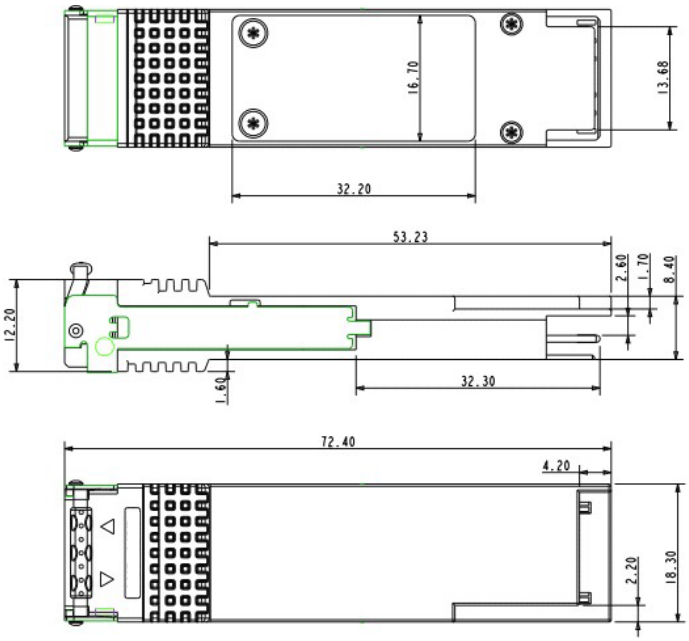

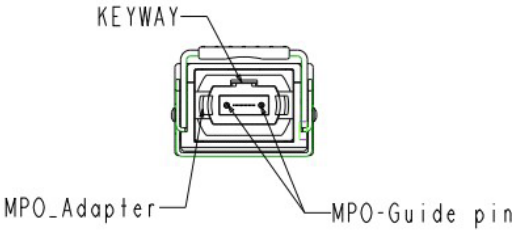

About ProLabs

Our extensive experience comes as standard. For over 20 years ProLabs has delivered optical connectivity solutions that give our customers freedom and choice through our ability to provide seamless interoperability. At the heart of our company is the ability to provide state-of-the-art optical transport and connectivity solutions that are compatible with more than 100 optical switching and transport platforms.

A Complete Portfolio of Network Solutions

ProLabs is focused on innovations in optical transport and connectivity. The combination of our knowledge of optics and networking equipment enables ProLabs to be your single source for optical transport and connectivity solutions from 100Mb to 1.6T while providing innovative solutions that increase network efficiency. We provide the optical connectivity expertise that is compatible with and enhances your switching and transport equipment.

The Trusted Partner

Customer service is our number one value. ProLabs has invested in people, labs and manufacturing capacity to ensure compatible products, and immediate answers to your questions. With Engineering and Manufacturing offices in the U.K. and U.S. augmented by field offices throughout the U.S., U.K. and Asia, ProLabs is able to be our customers best advocate 24 hours a day.

Contact Information

ProLabs US

Email: sales@prolabs.com
Telephone: 952-852-0252

ProLabs UK

Email: salessupport@prolabs.com
Telephone: +44 1285 719 600