E25GSFP28SR-I-C

Intel® E25GSFP28SR-I Compatible TAA 25GBase-SR SFP28 Transceiver (MMF, 850nm, 100m, LC, DOM, -40 to 85C)

Features:

- SFF-8402 and SFF-8472 Compliance
- Duplex LC Connector
- Multi-mode Fiber
- Industrial Temperature -40 to 85 Celsius
- Hot Pluggable
- Metal with Lower EMI
- Excellent ESD Protection
- RoHS Compliant and Lead Free

Applications:

- 25GBase Ethernet
- Access and Enterprise

Product Description

This Intel® E25GSFP28SR-I compatible SFP28 transceiver provides 25GBase-SR throughput up to 100m over multi-mode fiber (MMF) using a wavelength of 850nm via an LC connector. It is capable of withstanding rugged environments and can operate at temperatures between -40 and 85C. Our transceiver is built to meet or exceed OEM specifications and is guaranteed to be 100% compatible with Intel®. It has been programmed, uniquely serialized, and tested for data-traffic and application to ensure that it will initialize and perform identically. All of our transceivers comply with Multi-Source Agreement (MSA) standards to provide seamless network integration. Additional product features include Digital Optical Monitoring (DOM) support which allows access to real-time operating parameters. This transceiver is Trade Agreements Act (TAA) compliant. We stand behind the quality of our products and proudly offer a limited lifetime warranty.

ProLabs' transceivers are RoHS compliant and lead-free.

TAA refers to the Trade Agreements Act (19 U.S.C. & 2501-2581), which is intended to foster fair and open international trade. TAA requires that the U.S. Government may acquire only "U.S.-made or designated country end products.")

Rev. 012026

Regulatory Compliance

- ESD to the Electrical PINs: compatible with MIL-STD-883E Method 3015.7.
- ESD to the Duplex LC Receptacle: compatible with IEC 61000-4-2 GR-1089-CORE.
- Immunity compatible with IEC 61000-4-3.
- EMI compatible with FCC Part 15 Class B EN55022 Class B (CISPR 22B) VCCI Class B.
- Laser Eye Safety compatible with FDA 21CFR 1040.10 and 1040.11 EN60950, EN (IEC) 60825-1,2.
- RoHS compliant with 2002/95/EC 4.1&4.2 2005/747/EC.

Absolute Maximum Ratings

Parameter	Symbol	Min.	Typ.	Max	Unit
Storage Temperature	Ts	-40		85	˚C
Relative Humidity	RH	5		95	%
Supply Voltage	Vcc	-0.5		4.0	V
Operating Case Temperature	Tc	-40	25	85	˚C

Electrical Characteristics

Parameter		Symbol	Min	Typ	Max	Unit	Notes
Supply Voltage		Vcc	3.135	3.3	3.465	V	
Data Rate				25.78		GB/s	
Module Supply Current		Icc			290	mA	
Power Dissipation		P_D			1000	mW	
Transmitter							
Input Differential Impedance		Z_{IN}		100		Ω	
Differential Data Input Swing		$V_{IN, P-P}$	180		700	mV_{P-P}	
TX_FAULT	**Transmitter Fault**	V_{OH}	2.0		V_{CC}	V	TX_FAULT
	Normal Operation	V_{OL}	0		0.8	V	
TX_DISABLE	**Transmitter Disable**	V_{IH}	2.0		V_{CC}	V	TX_DISABLE
	Transmitter Enable	V_{IL}	0		0.8	V	
Receiver							
Output Differential Impedance		Z_O		100		Ω	
Differential Data Output Swing		$V_{OUT, P-P}$	300		850	mV_{P-P}	1
Data Output Rinse Time, Fall Time		tr, tf		30		Ps	2
Rx_LOS	**Loss of Signal (LOS)**	V_{OH}	2.0		VCC	V	RX_LOS
	Normal Operation	V_{OL}	0		0.8	V	

Notes:

1. Internally AC coupled, but requires a external 100Ω differential load termination.
2. 20-80%
3. LOS is an open collector output. Should be pulled up with 4.7Ω on the host board.

Optical Characteristics

Parameter	Symbol	Min	Typ	Max	Unit	Notes
Transmitter						
Launch Optical Power	Po	-7.6		+2.4	dBm	1
Extinction Ratio	ER	2			dB	
Center Wavelength Range	λc	840	850	860	nm	
Transmitter Dispersion Penalty @25.78GB/s	TWDP			5	dB	
Spectral Width (RMS) @25.78Gb/s	Δλ			0.6	nm	
Optical Return Loss Tolerance	ORLT			12	dB	
Pout @TX-Disable Asserted	P_{OFF}			-30	dBm	1
Receiver						
Center Wavelength	λc	840		860	nm	
Receiver Sensitivity (P avg)	S			-11	dBm	2
Receiver Overload (P avg)	P_{OL}	2.5			dBm	
Optical Return Loss	ORL	12			dB	
LOS De-Assert	LOS_D			-12	dBm	
LOS Assert	LOS_A	-30			dBm	
LOS Hysteresis		0.5			dB	

Notes:

1. 50/125µm fiber with NA = 0.2, 62.5/125µm fiber with NA = 0.275.
2. Measured with PRBS 231-1 at 10-4 BER @25.78Gb/s.

Pin Descriptions

Pin	Symbol	Name/Descriptions	Ref.
1	VeeT	Transmitter Ground	1
2	TX Fault	Transmitter Fault (LVTTL-O) - High indicates a fault condition	2
3	TX Disable	Transmitter Disable (LVTTL-I) – High or open disables the transmitter	3
4	SDA	Two wire serial interface Data Line (LVCMOS-I/O) (MOD-DEF2)	4
5	SCL	Two wire serial interface Clock Line (LVCMOS-I/O) (MOD-DEF1)	4
6	MOD_ABS	Module Absent (Output), connected to VeeT or VeeR in the module	5
7	RS0	Rate Select 0 – Not used, Presents high input impedance	6
8	RX_LOS	Receiver Loss of Signal (LVTTL-O)	2
9	RS1	Rate Select 1 – Not used, Presents high input impedance	6
10	VeeR	Receiver Ground	1
11	VeeR	Receiver Ground	1
12	RD-	Inverse Received Data out (CML-O), AC Coupled	
13	RD+	Received Data out (CML-O), AC Coupled	
14	VeeR	Receiver Ground	
15	VccR	Receiver Power - +3.3V	
16	VccT	Transmitter Power - +3.3 V	
17	VeeT	Transmitter Ground	1
18	TD+	Transmitter Data In (CML-I), AC Coupled	
19	TD-	Inverse Transmitter Data In (CML-I), AC Coupled	
20	VeeT	Transmitter Ground	1

Notes:

1. The module signal grounds are isolated from the module case.
2. This is an open collector/drain output that on the hostboad requires a 4.7KΩ to 10KΩ pull-up resistor to VccHost.
3. This input is internally biased high with a 4.7KΩ to 10KΩ pull-up resistor to VccT.
4. Two-Wire Serial interface clock and data lines require an external pull-up resistor dependent on the capacitance load.
5. This is a ground return that on the host board requires a 4.7KΩ to 10KΩ pull-up resistor to VccHost.
6. Rate select can also be set through the 2-wire bus in accordance with SFF-8472 v. 10.2, Rx Rate Select is set at Bit 3, Byte 110.
   Address A2h. Tx Rate Select is set at Bit 3, Byte 118, Address A2h.
   Note: writing a “1” selects maximum bandwidth operation. Rate select is the logic OR of the input state of Rate Select Pin and 2-wire bus.

Host PCB SFP+ pad assignment top view

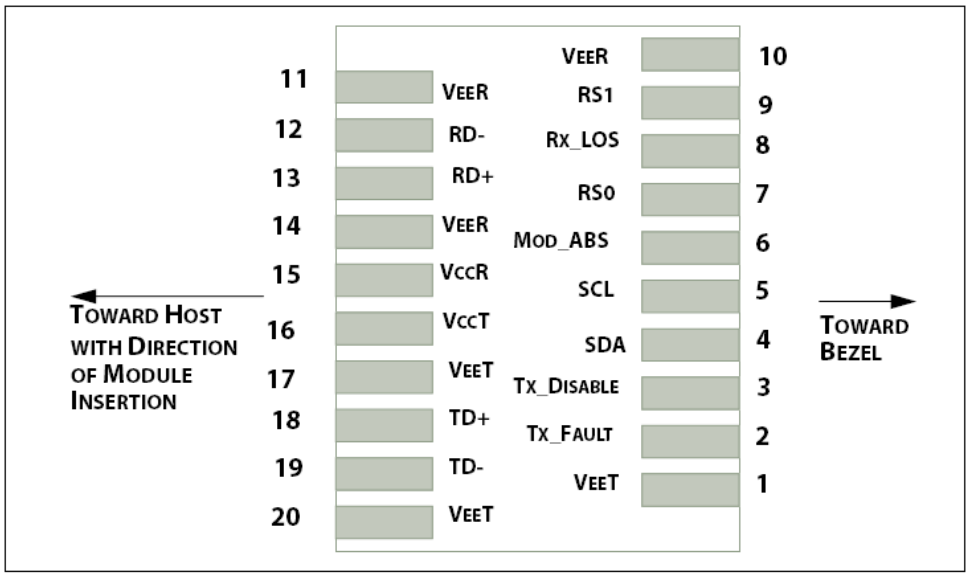

Recommended Host Board Power Supply Filter Network

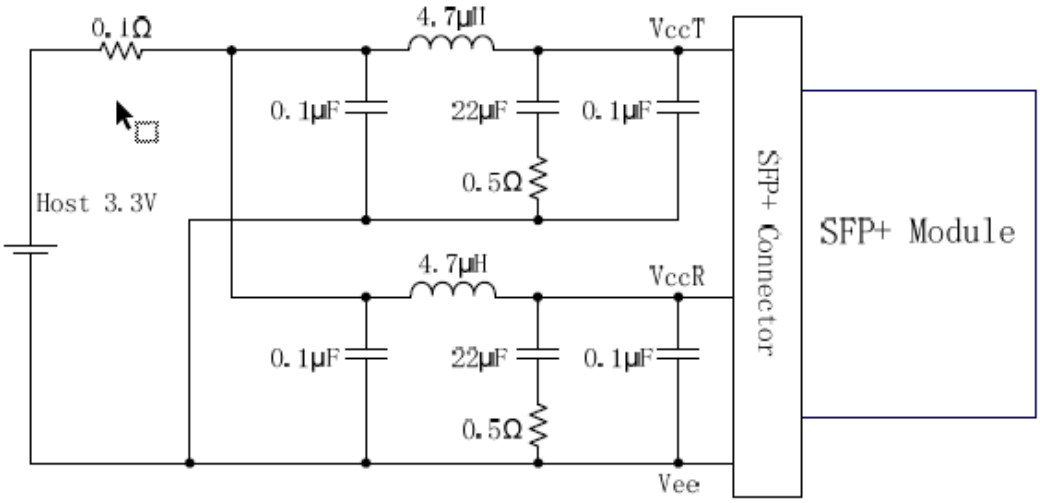

Recommended Application Interface Block Diagram

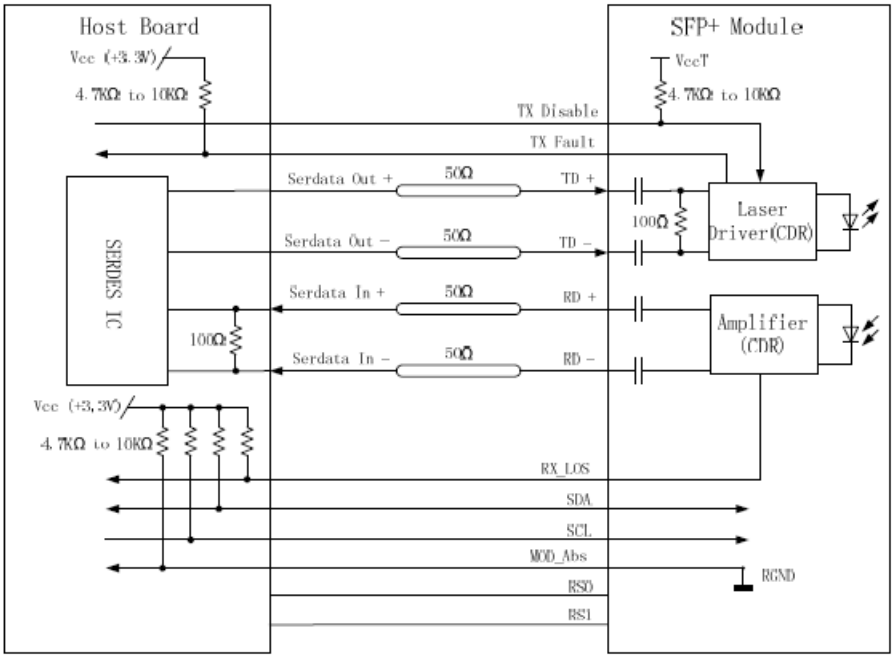

Mechanical Specifications

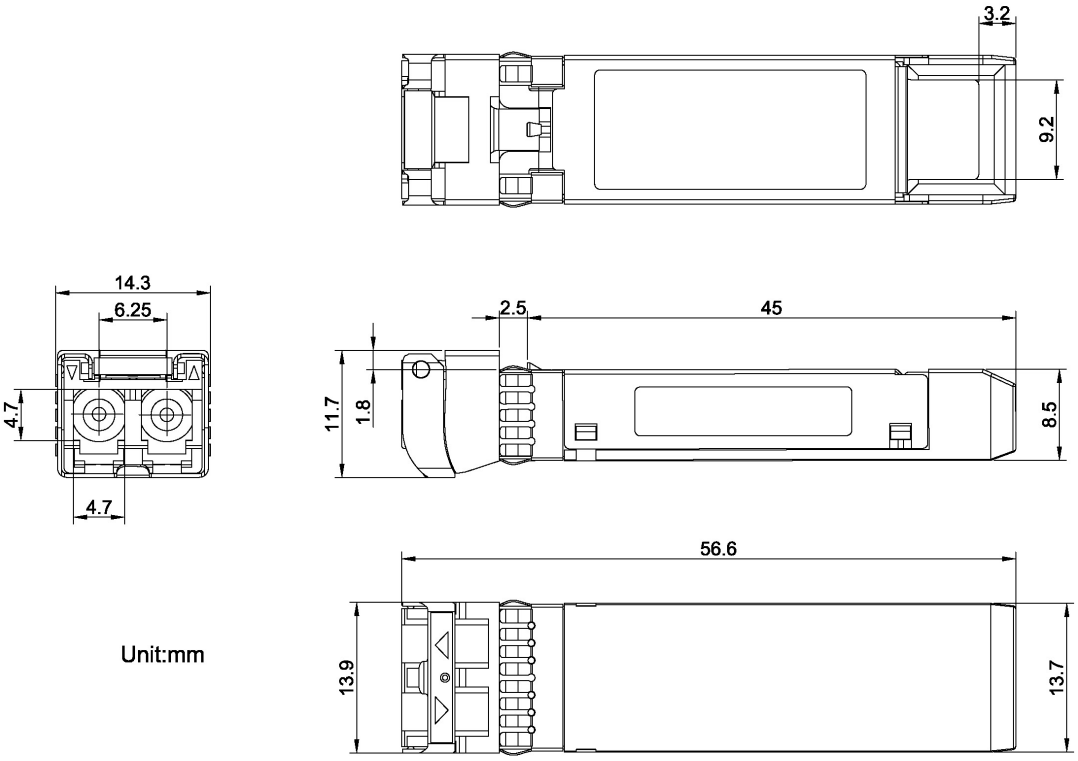

About ProLabs

Our extensive experience comes as standard. For over 20 years ProLabs has delivered optical connectivity solutions that give our customers freedom and choice through our ability to provide seamless interoperability. At the heart of our company is the ability to provide state-of-the-art optical transport and connectivity solutions that are compatible with more than 100 optical switching and transport platforms.

A Complete Portfolio of Network Solutions

ProLabs is focused on innovations in optical transport and connectivity. The combination of our knowledge of optics and networking equipment enables ProLabs to be your single source for optical transport and connectivity solutions from 100Mb to 1.6T while providing innovative solutions that increase network efficiency. We provide the optical connectivity expertise that is compatible with and enhances your switching and transport equipment.

The Trusted Partner

Customer service is our number one value. ProLabs has invested in people, labs and manufacturing capacity to ensure compatible products, and immediate answers to your questions. With Engineering and Manufacturing offices in the U.K. and U.S. augmented by field offices throughout the U.S., U.K. and Asia, ProLabs is able to be our customers best advocate 24 hours a day.

Contact Information

ProLabs US

Email: sales@prolabs.com
Telephone: 952-852-0252

ProLabs UK

Email: salessupport@prolabs.com
Telephone: +44 1285 719 600