C-Q28CIS28MX-P3M

Cisco® QSFP-4SFP25G-CU3M to Mellanox® MCP2M00-A003 Compatible TAA Compliant 100GBase-CU QSFP28 to 4xSFP28 Direct Attach Cable (Passive Twinax, 3m)

Features:

- QSFP28 End: Compliant with QSFP28 MSA specifications
- SFP28 End: Compliant with SFP28 MSA specifications
- 4 independent duplex channels operating at 25Gbps
- AC coupled inputs and outputs
- 100 Ohm differential impedance
- All-metal housing for superior EMI performance
- Single power supply 3.3V, low power consumption
- Operating temperature range: 0 to 70 Celsius
- RoHS Compliant and Lead Free



Applications:

- 100Gigabit Ethernet
- Serial Data Transmission
- Infiniband EDR

Product Description

This Cisco® QSFP-4SFP25G-CU3M to Mellanox® MCP2M00-A003 dual OEM compatible 100GBase-CU QSFP28 to 4xSFP28 passive TAA (Trade Acts Agreement) compliant direct attach cable has a maximum reach of 3.0m (9.8ft). It is 100% Cisco® to Mellanox® compatible and has been programmed, uniquely serialized, and data-traffic and application tested to ensure that it is compliant and functional. This direct attach cable will initialize and perform identically to Cisco® to Mellanox®'s individual cables and is built to meet or exceed Cisco® to Mellanox®'s specifications, and comply with MSA (Multi-Source Agreement) standards. We stand behind the quality of our products and proudly offer a limited lifetime warranty.

ProLabs' transceivers are RoHS compliant and lead-free.

TAA refers to the Trade Agreements Act (19 U.S.C. & 2501-2581), which is intended to foster fair and open international trade. TAA requires that the U.S. Government may acquire only "U.S.-made or designated country end products.")

TAA COMPLIANT

Rev. 011926

General Specifications

Parameter	Symbol	Min.	Typ.	Max.	Unit	Notes
Bit Error Rate	BER			10^{-12}		
Operating Temperature	Tc	0		70	°C	1
Storage Temperature	Tstg	-40		85	°C	2
Input Voltage	Vcc	3.14	3.3	3.46	V	
Product Weight	Gd		290		g/PCS	
Cable Weight	Gc		155		g/M	3
SFP28 End Dust Cap Weight	Gs		0.80		g/PCS	
QSFP28 End Dust Cap Weight	Gq		1.40		g/PCS	
Cable Impedance	Z	90	100	110	Ω	

Notes:

1. Case temperature.
2. Ambient temperature.
3. The weight of unit length cable (four sticks). For example, the weight of a 5m cable is 320+175*(5-1)+0.80*4+1.40=1024.6g.

Cable Specifications

Cable Length	Wire Gauge AWG	Cable Diameter OD (mm)	Minimum Bending Radius R (mm)	Insertion Loss Level
3m	28AWG	5.0	28	CA-25G-S

QSFP28 Pin Descriptions

Pin	Symbol	Name/Description	Notes
1	GND	Module Ground.	5
2	Tx2-	Transmitter Inverted Data Input. LAN2.	
3	Tx2+	Transmitter Non-Inverted Data Input. LAN2.	
4	GND	Module Ground.	5
5	Tx4-	Transmitter Inverted Data Input. LAN4.	
6	Tx4+	Transmitter Non-Inverted Data Input. LAN4.	
7	GND	Module Ground.	5
8	ModselL	Module Select Pin. The module responds to 2-wire serial communication when low level.	1
9	ResetlL	Module Reset.	2
10	VccRx	+3.3V Receiver Power Supply.	
11	SCL	2-Wire Serial Interface Clock.	
12	SDA	2-Wire Serial Interface Data.	
13	GND	Module Ground.	5
14	Rx3+	Receiver Non-Inverted Data Output. LAN3.	
15	Rx3-	Receiver Inverted Data Output. LAN3.	
16	GND	Module Ground.	5
17	Rx1+	Receiver Non-Inverted Data Output. LAN1.	
18	Rx1-	Receiver Inverted Data Output. LAN1.	
19	GND	Module Ground.	5
20	GND	Module Ground.	5
21	Rx2-	Receiver Inverted Data Output. LAN2.	
22	Rx2+	Receiver Non-Inverted Data Output. LAN2.	
23	GND	Module Ground.	5
24	Rx4-	Receiver Inverted Data Output. LAN4.	
25	Rx4+	Receiver Non-Inverted Data Output. LAN4.	
26	GND	Module Ground.	5
27	ModPrsL	The module is inserted into the indicate pin and grounded within the module.	3
28	IntL	Interrupt.	4
29	VccTx	+3.3V Transmitter Power Supply.	
30	Vcc1	+3.3V Power Supply.	
31	LPMode	Low-Power Mode.	5
32	GND	Module Ground.	5
33	Tx3+	Transmitter Non-Inverted Data Input. LAN3.	
34	Tx3-	Transmitter Inverted Data Input. LAN3.	

35	GND	Module Ground.	5
36	Tx1+	Transmitter Non-Inverted Data Input. LAN1.	
37	Tx1-	Transmitter Inverted Data Input. LAN1.	
38	GND	Module Ground.	5

Notes:

1. ModSelL is the input pin. The module responds to 2-wire serial communication commands when it is held “low” by the host. ModSelL allows multiple QSFP modules to be used on a single 2-wire interface bus. If ModSelL is “high,” the module will not respond to any 2-wire interface communication from the host. ModSelL has internal pull-up resistors in the module.
2. The module restart pin, when the low level on the ResetL pin lasts longer than the minimum pulse length, resets the module and restores all user modules to their default state. When performing reset device, the host should ignore all status bits. Until the module reset interrupt is completed, please note that, during hot plugging, the module will issue this information to complete the reset interrupt without resetting.
3. This pin is active “high,” indicating that the module is running under a low-power module. The signal has no effect on the functionality of this product.
4. IntL is the output pin, which is the open collector output and must be pulled up to Vcc with a 4.7kΩ to 10kΩ resistor on the motherboard. When it is “low,” it indicates that the module may malfunction. The host uses a 2-wire serial interface to identify the interrupt source.
5. The circuit ground is internally isolated from the chassis ground.

Electrical Pad Layout (QSFP28 End)

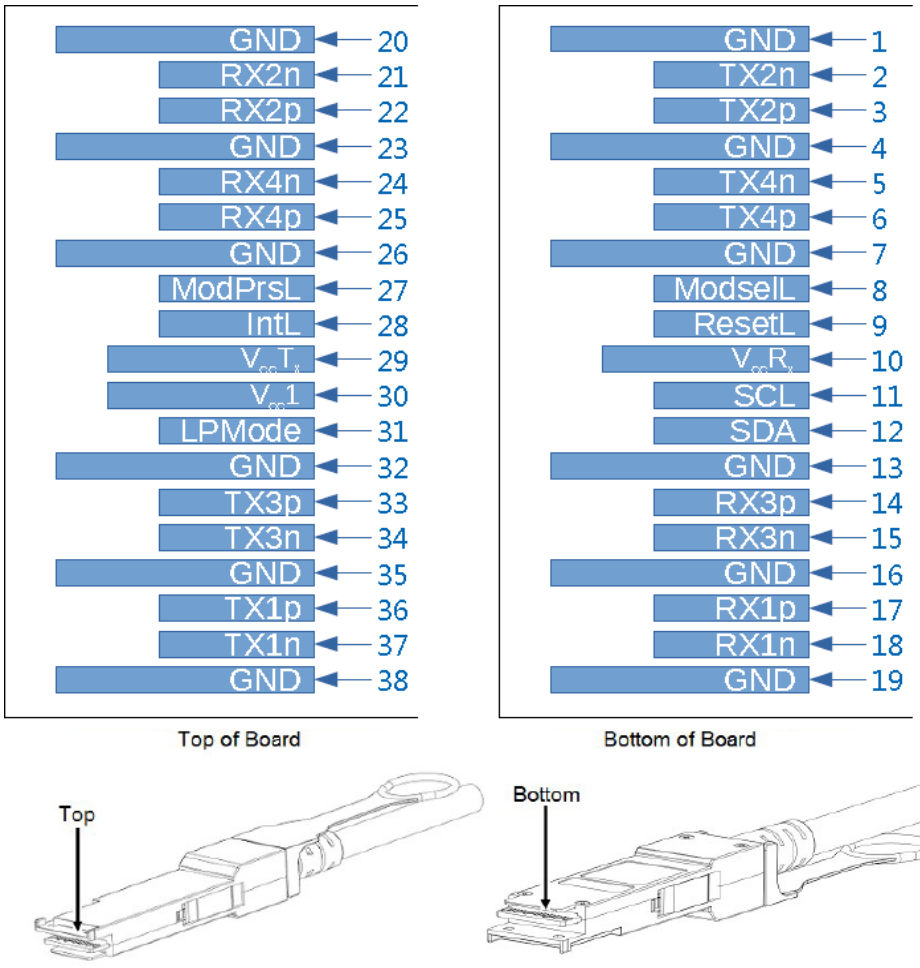

SFP28 Pin Descriptions

Pin	Symbol	Name/Description	Notes
1	VeeT	Transmitter Ground (Common with Receiver Ground).	
2	Tx_Fault	Not Used. Transmitter Failure Alarm.	1
3	Tx_Disable	Not Used. The signal turns off the module transmitter when it is “high” or “open.”	2
4	SDA	Data Line for Serial ID.	
5	SCL	Clock Line for Serial ID.	
6	MOD_ABS	Module Absent. Grounded within the module.	
7	RS0	No Connection Required.	1
8	LOS	Loss of Signal Indication. “Logic 0” indicates normal operation.	2
9	RS1	No Connection Required.	1
10	VeeR	Receiver Ground (Common with Transmitter Ground).	
11	VeeR	Receiver Ground (Common with Transmitter Ground).	
12	RD-	Receiver Inverted Data Out. AC Coupled.	
13	RD+	Receiver Non-Inverted Data Out. AC Coupled.	
14	VeeR	Receiver Ground (Common with Transmitter Ground).	
15	VccR	Receiver Power Supply.	
16	VccT	Transmitter Power Supply.	
17	VeeT	Transmitter Ground (Common with Receiver Ground).	
18	TD+	Transmitter Non-Inverted Data In. AC Coupled.	
19	TD-	Transmitter Inverted Data In. AC Coupled.	
20	VeeT	Transmitter Ground (Common with Receiver Ground).	

Notes:

1. The circuit ground is isolated from the chassis ground.
2. Should be pulled up with 4.7kΩ to 10kΩ on the host board to a voltage between 2V and 3.6V.

Electrical Pad Layout (SFP28 End)

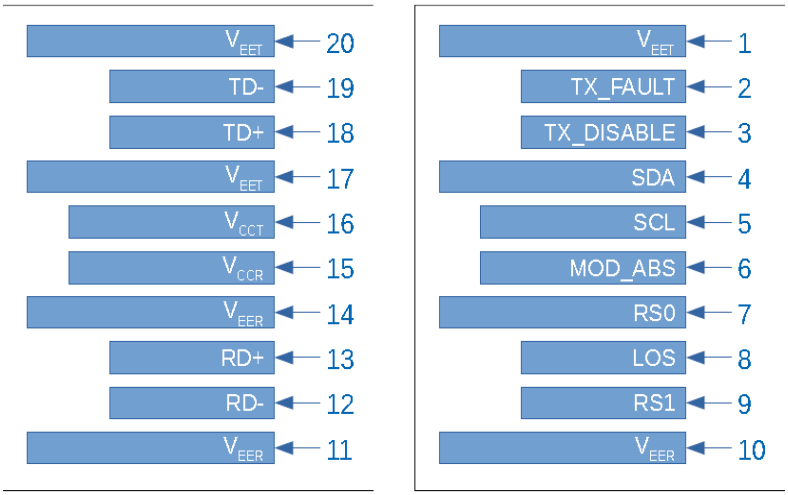

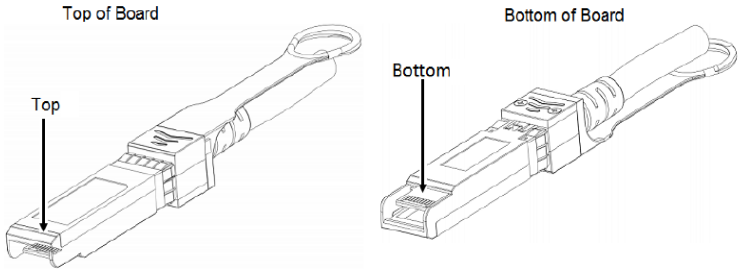

Mechanical Dimensions

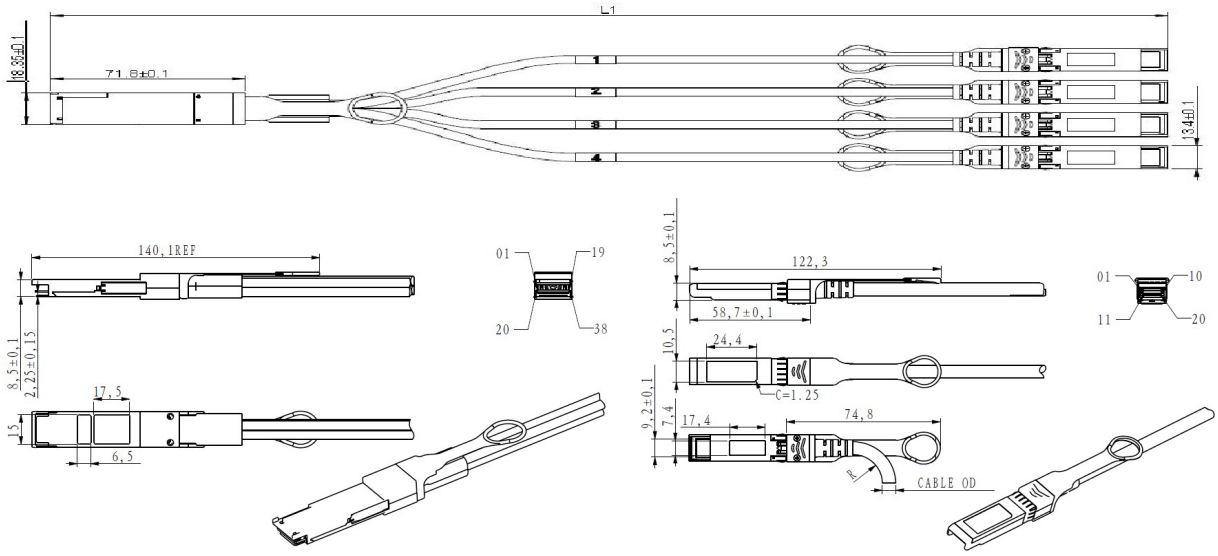

All Dimensions Are ±0.2mm Unless Otherwise Specified
Unit: mm

About ProLabs

Our extensive experience comes as standard. For over 20 years ProLabs has delivered optical connectivity solutions that give our customers freedom and choice through our ability to provide seamless interoperability. At the heart of our company is the ability to provide state-of-the-art optical transport and connectivity solutions that are compatible with more than 100 optical switching and transport platforms.

A Complete Portfolio of Network Solutions

ProLabs is focused on innovations in optical transport and connectivity. The combination of our knowledge of optics and networking equipment enables ProLabs to be your single source for optical transport and connectivity solutions from 100Mb to 1.6T while providing innovative solutions that increase network efficiency. We provide the optical connectivity expertise that is compatible with and enhances your switching and transport equipment.

The Trusted Partner

Customer service is our number one value. ProLabs has invested in people, labs and manufacturing capacity to ensure compatible products, and immediate answers to your questions. With Engineering and Manufacturing offices in the U.K. and U.S. augmented by field offices throughout the U.S., U.K. and Asia, ProLabs is able to be our customers best advocate 24 hours a day.



Contact Information

ProLabs US

Email: sales@prolabs.com
Telephone: 952-852-0252

ProLabs UK

Email: salessupport@prolabs.com
Telephone: +44 1285 719 600