C-Q28CIS28IN-O7M

Cisco® QSFP-4SFP25G-AOC7M to Intel® XXVAOCBL7M Compatible TAA Compliant 100GBase-AOC QSFP28 to 4xSFP28 Direct Attach Cable (850nm, MMF, 7m)

Features:

- QSFP28 and SFP28 MSA Compliant
- Four Independent Full-Duplex Channels
- Supports 103.1Gbps Aggregate Bit Rate
- 4x25G Electrical Interface (OIF CEI-28G-VSR) for QSFP28 Terminal
- 25G Electrical Interface (OIF CEI-28G-VSR) for SFP28 Terminal
- Maximum Power Consumption of 2.5W for QSFP28 Terminal and 1.0W for Each SFP28 Terminal
- Single Power Supply of 3.3V
- Operating Temperature: 0 to 70 Celsius
- RoHS Compliant and Lead-Free



Applications:

- 100G Ethernet
- Infiniband EDR

Product Description

This Cisco® QSFP-4SFP25G-AOC7M to Intel® XXVAOCBL7M dual OEM compatible 100GBase-AOC QSFP28 to 4xSFP28 active optical cable has a maximum reach of 7.0m (23.0ft). It is 100% Cisco® to Intel® compatible and has been programmed, uniquely serialized, data-traffic and application tested to ensure that it is compliant and functional. This active optical cable will initialize and perform identically to Cisco® and Intel®'s individual cables and is built to meet or exceed Cisco® and Intel®'s specifications. This product complies with MSA (Multi-Source Agreement) standards and is TAA (Trade Acts Agreement) compliant. We stand behind the quality of our products and proudly offer a limited lifetime warranty.

ProLabs' transceivers are RoHS compliant and lead-free.

TAA refers to the Trade Agreements Act (19 U.S.C. & 2501-2581), which is intended to foster fair and open international trade. TAA requires that the U.S. Government may acquire only "U.S.-made or designated country end products.")

TAA COMPLIANT

Rev. 011926

Absolute Maximum Ratings

Parameter	Symbol	Min.	Max.	Unit	Notes
Storage Temperature	Tstg	-40	85	˚C	
Operating Case Temperature	Tc	0	70	˚C	
Power Supply Voltage	Vcc	-0.5	3.6	V	
Relative Humidity	RH	0	85	%	1
Data Rate Accuracy		-100		100	ppm
Control Input Voltage - High		2		Vcc	V
Control Input Voltage - Low		0		0.8	V

Notes:

1. Non-condensing.

QSFP28 Electrical Characteristics

Parameter	Symbol / Test Point	Min.	Typ.	Max.	Unit	Notes
Power Consumption				2.5	W	
Data Rate Per Lane			25.781235			
Supply Current	Icc			757	mA	
Power Supply Voltage	Vcc	3.135	3.3	3.465		
Transmitter						
Overload Differential Voltage Pk-Pk	TP1a	900			mV	
Common-Mode Voltage (Vcm)	TP1	-350		2850	mV	1
Differential Termination Resistance Mismatch	TP1			10	%	2
Differential Return Loss (SDD11)	TP1			See CEI-28G-VSR Equation 13-19	dB	
Common-Mode to Differential Conversion and Differential to Common-Mode Conversion (SDC11, SCD11)	TP1			See CEI-28G-VSR Equation 13-20	dB	
Stressed Input Test	TP1a	See CEI-28G-VSR Section 13.3.11.2.1				
Receiver						
Differential Voltage Pk-Pk	TP4			900	mV	
Common-Mode Voltage (Vcm)	TP4	-350		2850	mV	1
Common-Mode Noise (RMS)	TP4			17.5	mV	
Differential Termination Resistance Mismatch	TP4			10	%	2
Common-Mode to Differential Conversion and Differential to Common-Mode Conversion (SDC22, SCD22)	TP4			See CEI-28G-VSR Equation 13		
Common-Mode Return Loss (SCC22)	TP4			-2	dB	3
Transition Time (20-80%)	TP4	9.5		5.5	dB	
Vertical Eye Closure (VEC)	TP4			5.5	dB	
Eye Width at 10^{-15} Probability (EW15)	TP4	0.57			UI	
Eye Width at 10^{-15} Probability (EH15)	TP4	228			mV	

Notes:

1. Vcm is generated by the host. Specification includes the effects of ground offset voltage.
2. At 1MHz.
3. From 250MHz to 30GHz.

SFP28 Electrical Characteristics

Parameter	Symbol / Test Point	Min.	Typ.	Max.	Unit	Notes
Power Consumption				1.0	W	1
Data Rate Per Lane			25.781235			
Supply Current	Icc			300	mA	1
Power Supply Voltage	Vcc	3.135	3.3	3.465		
Transmitter						
Overload Differential Voltage Pk-Pk	TP1a	900			mV	
Common-Mode Voltage (Vcm)	TP1	-350		2850	mV	2
Differential Termination Resistance Mismatch	TP1			10	%	3
Differential Return Loss (SDD11)	TP1			See CEI-28G-VSR Equation 13-19	dB	
Common-Mode to Differential Conversion and Differential to Common-Mode Conversion (SDC11, SCD11)	TP1			See CEI-28G-VSR Equation 13-20	dB	
Stressed Input Test	TP1a	See CEI-28G-VSR Section 13.3.11.2.1				
Receiver						
Differential Voltage Pk-Pk	TP4			900	mV	
Common-Mode Voltage (Vcm)	TP4	-350		2850	mV	2
Common-Mode Noise (RMS)	TP4			17.5	mV	3
Differential Termination Resistance Mismatch	TP4			10	%	
Differential Return Loss (SDD22)	TP4			See CEI-28G-VSR Equation 13-19		
Common-Mode to Differential Conversion and Differential to Common-Mode Conversion (SDC22, SCD22)	TP4			See CEI-28G-VSR Equation 13-21		
Common-Mode Return Loss (SCC22)	TP4			-2	dB	4
Transition Time (20-80%)	TP4	9.5		5.5	dB	
Vertical Eye Closure (VEC)	TP4			5.5	dB	
Eye Width at 10^{-15} Probability (EW15)	TP4	0.57			UI	
Eye Width at 10^{-15} Probability (EH15)	TP4	228			mV	

Notes:

1. Per terminal.
2. Vcm is generated by the host. Specification includes the effects of ground offset voltage.
3. At 1MHz.
4. From 250MHz to 30GHz.

QSFP28 Pin Descriptions

Pin	Logic	Symbol	Name/Description	Notes
1		GND	Module Ground.	1
2	CML-I	Tx2-	Transmitter Inverted Data Input.	
3	CML-I	Tx2+	Transmitter Non-Inverted Data Output.	
4		GND	Module Ground.	1
5	CML-I	Tx4-	Transmitter Inverted Data Input.	
6	CML-I	Tx4+	Transmitter Non-Inverted Data Output.	
7		GND	Module Ground.	1
8	LVTTL-I	ModSelL	Module Select.	
9	LVTTL-I	ResetL	Module Reset.	
10		VccRx	+3.3V Receiver Power Supply.	2
11	LVCMOS-I/O	SCL	2-Wire Serial Interface Clock.	
12	LVCMOS-I/O	SDA	2-Wire Serial Interface Data.	
13		GND	Module Ground.	
14	CML-O	Rx3+	Receiver Non-Inverted Data Output.	
15	CML-O	Rx3-	Receiver Inverted Data Output.	
16		GND	Module Ground.	1
17	CML-O	Rx1+	Receiver Non-Inverted Data Output.	
18	CML-O	Rx1-	Receiver Inverted Data Output.	
19		GND	Module Ground.	1
20		GND	Module Ground.	1
21	CML-O	Rx2-	Receiver Inverted Data Output.	
22	CML-O	Rx2+	Receiver Non-Inverted Data Output.	
23		GND	Module Ground.	1
24	CML-O	Rx4-	Receiver Inverted Data Output.	1
25	CML-O	Rx4+	Receiver Non-Inverted Data Output.	
26		GND	Module Ground.	1
27	LVTTL-O	ModPrsL	Module Present.	
28	LVTTL-O	IntL	Interrupt.	
29		VccTx	+3.3V Transmitter Power Supply.	2
30		Vcc1	+3.3V Power Supply.	2
31	LVTTL-I	LPMode	Low-Power Mode.	
32		GND	Module Ground.	1
33	CML-I	Tx3+	Transmitter Non-Inverted Data Input.	
34	CML-I	Tx3-	Transmitter Inverted Data Output.	

35		GND	Module Ground.	1
36	CML-I	Tx1+	Transmitter Non-Inverted Data Input.	
37	CML-I	Tx1-	Transmitter Inverted Data Output.	
38		GND	Module Ground.	1

Notes:

1. GND is the symbol for signal and supply (power) common for QSFP28 modules. All are common within the QSFP28 module, and all module voltages are referenced to this potential unless otherwise noted. Connect these directly to the host board signal common ground plane.
2. VccRx, Vcc1, and VccTx are the receiving and transmission power supplies and shall be applied concurrently. Recommended host board power supply filtering is shown below. VccRx, Vcc1, and VccTx may be internally connected within the QSFP28 transceiver module in any combination. The connector pins are each rated for a maximum current of 1000mA.

QSFP28 Connector

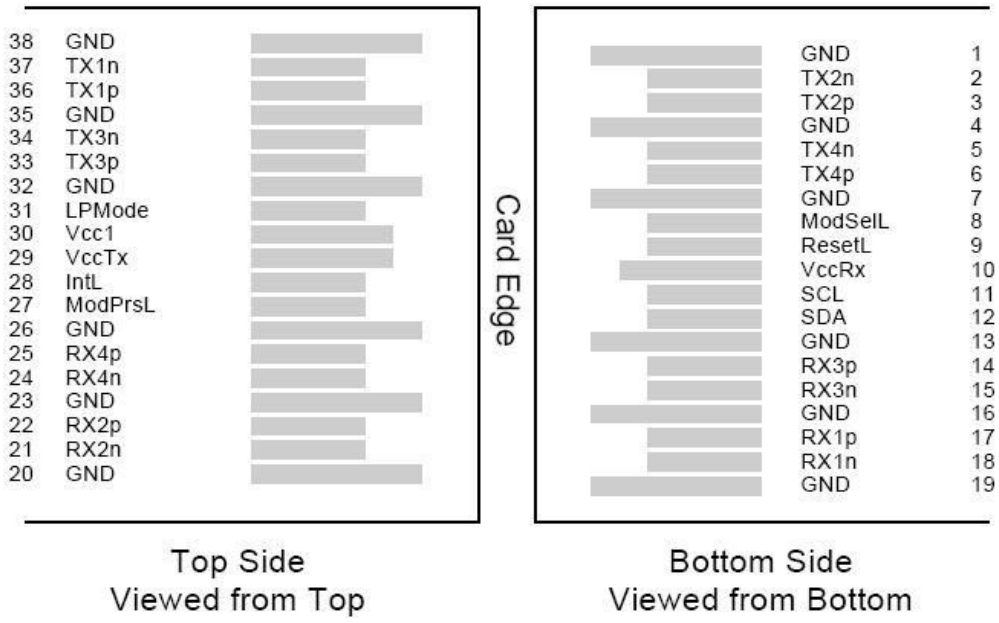

SFP28 Pin Descriptions

Pin	Logic	Symbol	Name/Description	Notes
1		VeeT	Module Transmitter Ground.	1
2	LVTTL-O	Tx_Fault	Module Transmitter Fault.	
3	LVTTL-I	Tx_Disable	Transmitter Disable. Turns off the transmitter's laser output.	
4	LVTTL-I/O	SDA	2-Wire Serial Interface Data.	2
5	LVTTL-I	SCL	2-Wire Serial Interface Clock.	2
6		MOD_DEF0	Module Definition 0. Grounded within the module.	
7	LVTTL-I	RS0	Receiver Rate Select.	
8	LVTTL-O	Rx_LOS	Receiver Loss of Signal Indication. Active LOW.	
9	LVTTL-I	RS1	Transmitter Rate Select. Not Used.	
10		VeeR	Module Receiver Ground.	1
11		VeeR	Module Receiver Ground.	1
12	CML-O	RD-	Receiver Inverted Data Output.	
13	CML-O	RD+	Receiver Data Output.	
14		VeeR	Module Receiver Ground.	1
15		VccR	Module Receiver +3.3V Supply.	
16		VccT	Module Receiver +3.3V Supply.	
17		VeeT	Module Transmitter Ground.	1
18	CML-I	TD+	Transmitter Non-Inverted Data Input.	
19	CML-I	TD-	Transmitter Inverted Data Input.	
20		VeeT	Module Transmitter Ground.	1

Notes:

1. Module ground pins (GND) are isolated from the module case.
2. Shall be pulled up with 4.7kΩ to 10kΩ to a voltage between 3.15V and 3.45V on the host board.

SFP28 Module Interface

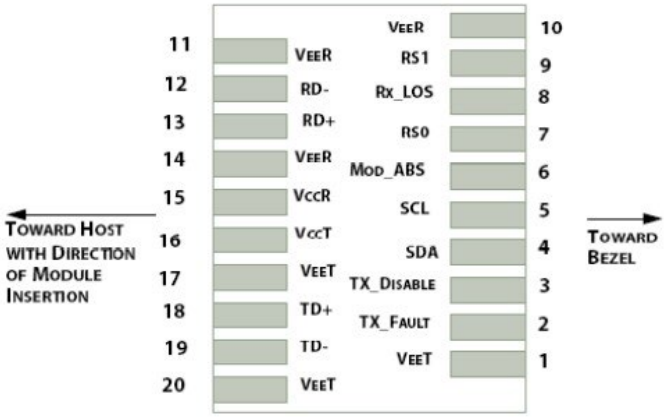

SFP28 Module Contact Assignment

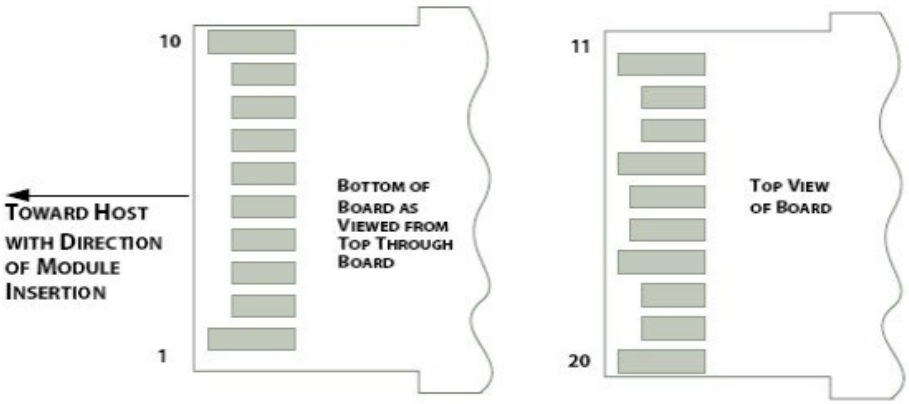

QSFP28 Recommended Power Supply

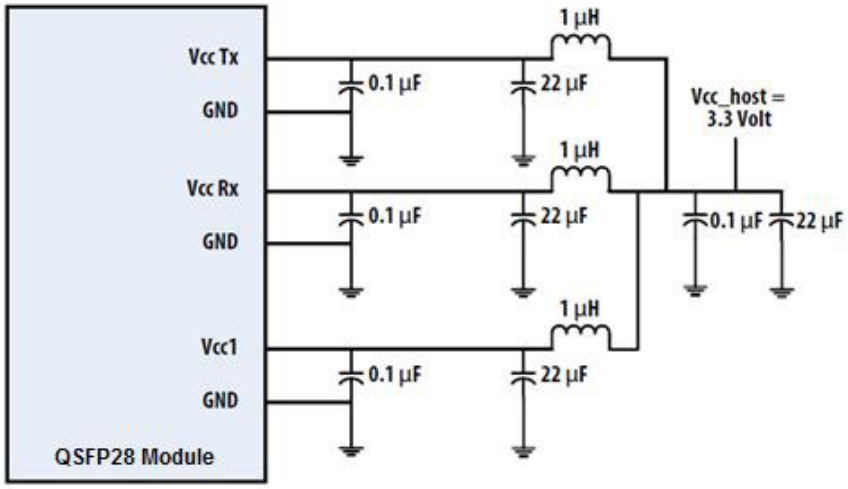

SFP28 Recommended Power Supply

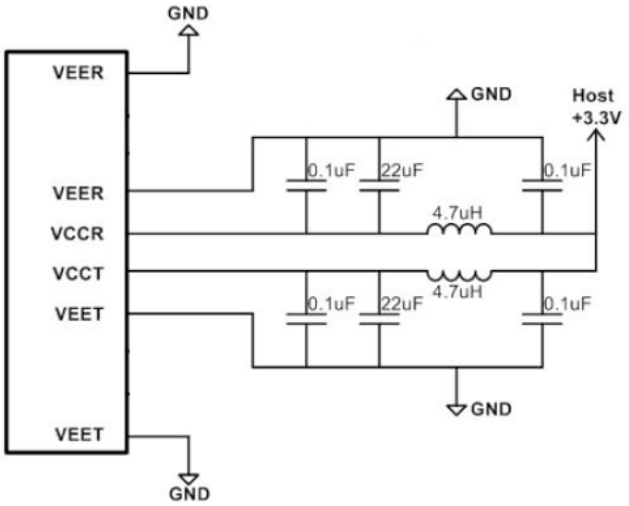

QSFP28 Mechanical Specifications

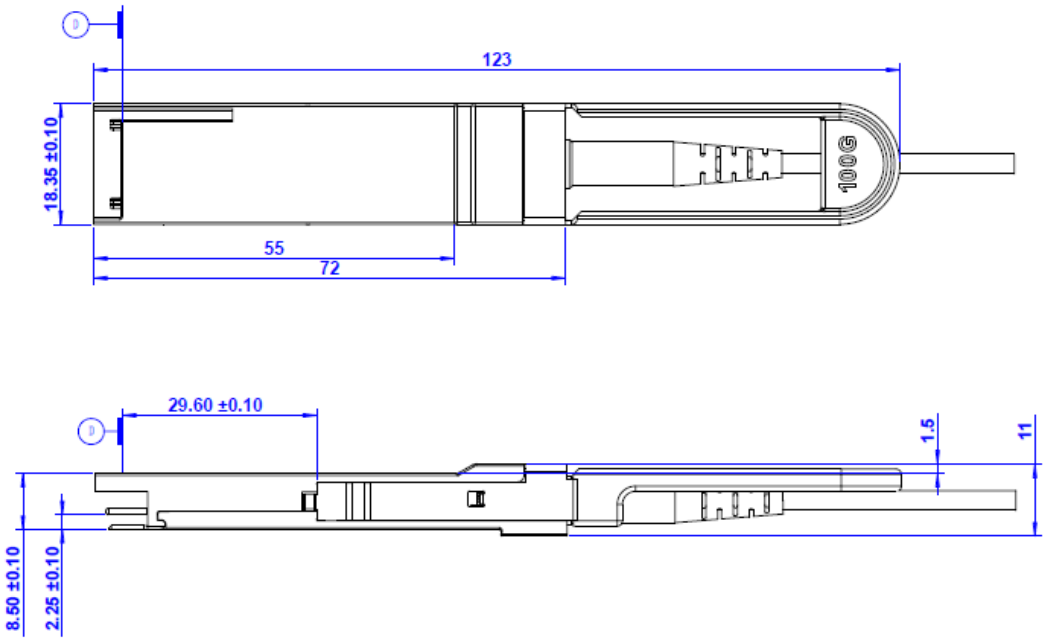

SFP28 Mechanical Specifications

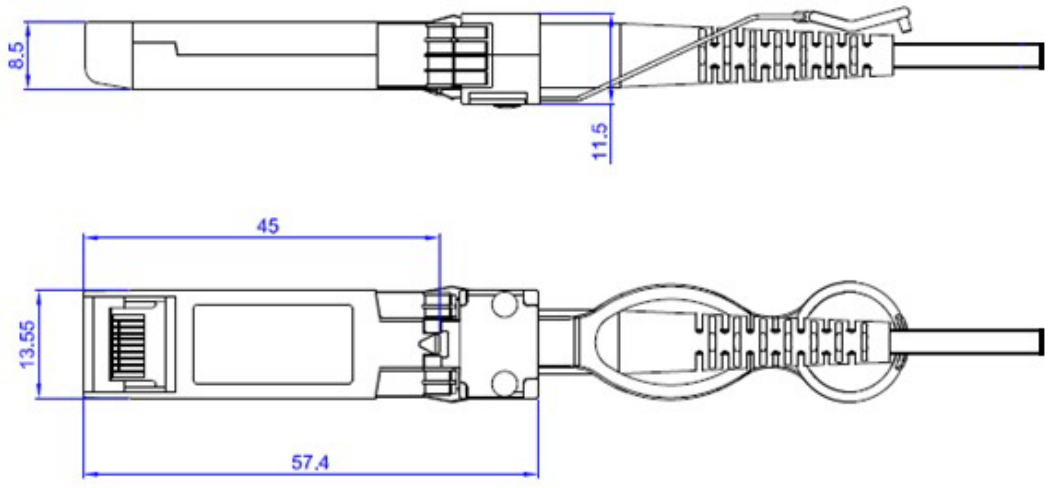

About ProLabs

Our extensive experience comes as standard. For over 20 years ProLabs has delivered optical connectivity solutions that give our customers freedom and choice through our ability to provide seamless interoperability. At the heart of our company is the ability to provide state-of-the-art optical transport and connectivity solutions that are compatible with more than 100 optical switching and transport platforms.

A Complete Portfolio of Network Solutions

ProLabs is focused on innovations in optical transport and connectivity. The combination of our knowledge of optics and networking equipment enables ProLabs to be your single source for optical transport and connectivity solutions from 100Mb to 1.6T while providing innovative solutions that increase network efficiency. We provide the optical connectivity expertise that is compatible with and enhances your switching and transport equipment.

The Trusted Partner

Customer service is our number one value. ProLabs has invested in people, labs and manufacturing capacity to ensure compatible products, and immediate answers to your questions. With Engineering and Manufacturing offices in the U.K. and U.S. augmented by field offices throughout the U.S., U.K. and Asia, ProLabs is able to be our customers best advocate 24 hours a day.



Contact Information

ProLabs US

Email: sales@prolabs.com
Telephone: 952-852-0252

ProLabs UK

Email: salessupport@prolabs.com
Telephone: +44 1285 719 600