**C-Q28CIS28IN-O3M**

Cisco® QSFP-4SFP25G-AOC3M to Intel® XXVAOCBL3M Compatible TAA Compliant 100GBase-AOC QSFP28 to 4xSFP28 Direct Attach Cable (850nm, MMF, 3m)

**Features:**

- QSFP28 and SFP28 MSA Compliant
- Four Independent Full-Duplex Channels
- Supports 103.1Gbps Aggregate Bit Rate
- 4x25G Electrical Interface (OIF CEI-28G-VSR) for QSFP28 Terminal
- 25G Electrical Interface (OIF CEI-28G-VSR) for SFP28 Terminal
- Maximum Power Consumption of 2.5W for QSFP28 Terminal and 1.0W for Each SFP28 Terminal
- Single Power Supply of 3.3V
- Operating Temperature: 0 to 70 Celsius
- RoHS Compliant and Lead-Free



**Applications:**

- 100G Ethernet
- Infiniband EDR

**Product Description**

This Cisco® QSFP-4SFP25G-AOC3M to Intel® XXVAOCBL3M dual OEM compatible 100GBase-AOC QSFP28 to 4xSFP28 active optical cable has a maximum reach of 3.0m (9.8ft). It is 100% Cisco® to Intel® compatible and has been programmed, uniquely serialized, data-traffic and application tested to ensure that it is compliant and functional. This active optical cable will initialize and perform identically to Cisco® and Intel®'s individual cables and is built to meet or exceed Cisco® and Intel®'s specifications. This product complies with MSA (Multi-Source Agreement) standards and is TAA (Trade Acts Agreement) compliant. We stand behind the quality of our products and proudly offer a limited lifetime warranty.

ProLabs' transceivers are RoHS compliant and lead-free.

TAA refers to the Trade Agreements Act (19 U.S.C. & 2501-2581), which is intended to foster fair and open international trade. TAA requires that the U.S. Government may acquire only "U.S.-made or designated country end products.")

TAA COMPLIANT

**Rev. 011926**

### Absolute Maximum Ratings

| Parameter | Symbol | Min. | Max. | Unit | Notes |
|---|---|---|---|---|---|
| **Storage Temperature** | Tstg | -40 | 85 | ˚C | |
| **Operating Case Temperature** | Tc | 0 | 70 | ˚C | |
| **Power Supply Voltage** | Vcc | -0.5 | 3.6 | V | |
| **Relative Humidity** | RH | 0 | 85 | % | 1 |
| **Data Rate Accuracy** | | -100 | | 100 | ppm |
| **Control Input Voltage - High** | | 2 | | Vcc | V |
| **Control Input Voltage - Low** | | 0 | | 0.8 | V |

**Notes:**

1. Non-condensing.

**QSFP28 Electrical Characteristics**

| Parameter | Symbol / Test Point | Min. | Typ. | Max. | Unit | Notes |
|---|---|---|---|---|---|---|
| **Power Consumption** | | | | 2.5 | W | |
| **Data Rate Per Lane** | | | 25.781235 | | | |
| **Supply Current** | Icc | | | 757 | mA | |
| **Power Supply Voltage** | Vcc | 3.135 | 3.3 | 3.465 | | |
| **Transmitter** | | | | | | |
| **Overload Differential Voltage Pk-Pk** | TP1a | 900 | | | mV | |
| **Common-Mode Voltage (Vcm)** | TP1 | -350 | | 2850 | mV | 1 |
| **Differential Termination Resistance Mismatch** | TP1 | | | 10 | % | 2 |
| **Differential Return Loss (SDD11)** | TP1 | | | See CEI-28G-VSR Equation 13-19 | dB | |
| **Common-Mode to Differential Conversion and Differential to Common-Mode Conversion (SDC11, SCD11)** | TP1 | | | See CEI-28G-VSR Equation 13-20 | dB | |
| **Stressed Input Test** | TP1a | See CEI-28G-VSR Section 13.3.11.2.1 | | | | |
| **Receiver** | | | | | | |
| **Differential Voltage Pk-Pk** | TP4 | | | 900 | mV | |
| **Common-Mode Voltage (Vcm)** | TP4 | -350 | | 2850 | mV | 1 |
| **Common-Mode Noise (RMS)** | TP4 | | | 17.5 | mV | |
| **Differential Termination Resistance Mismatch** | TP4 | | | 10 | % | 2 |
| **Common-Mode to Differential Conversion and Differential to Common-Mode Conversion (SDC22, SCD22)** | TP4 | | | See CEI-28G-VSR Equation 13 | | |
| **Common-Mode Return Loss (SCC22)** | TP4 | | | -2 | dB | 3 |
| **Transition Time (20-80%)** | TP4 | 9.5 | | 5.5 | dB | |
| **Vertical Eye Closure (VEC)** | TP4 | | | 5.5 | dB | |
| **Eye Width at $10^{-15}$ Probability (EW15)** | TP4 | 0.57 | | | UI | |
| **Eye Width at $10^{-15}$ Probability (EH15)** | TP4 | 228 | | | mV | |

**Notes:**

1. Vcm is generated by the host. Specification includes the effects of ground offset voltage.
2. At 1MHz.
3. From 250MHz to 30GHz.

**SFP28 Electrical Characteristics**

| Parameter | Symbol / Test Point | Min. | Typ. | Max. | Unit | Notes |
|---|---|---|---|---|---|---|
| **Power Consumption** | | | | 1.0 | W | 1 |
| **Data Rate Per Lane** | | | 25.781235 | | | |
| **Supply Current** | Icc | | | 300 | mA | 1 |
| **Power Supply Voltage** | Vcc | 3.135 | 3.3 | 3.465 | | |
| **Transmitter** | | | | | | |
| **Overload Differential Voltage Pk-Pk** | TP1a | 900 | | | mV | |
| **Common-Mode Voltage (Vcm)** | TP1 | -350 | | 2850 | mV | 2 |
| **Differential Termination Resistance Mismatch** | TP1 | | | 10 | % | 3 |
| **Differential Return Loss (SDD11)** | TP1 | | | See CEI-28G-VSR Equation 13-19 | dB | |
| **Common-Mode to Differential Conversion and Differential to Common-Mode Conversion (SDC11, SCD11)** | TP1 | | | See CEI-28G-VSR Equation 13-20 | dB | |
| **Stressed Input Test** | TP1a | See CEI-28G-VSR Section 13.3.11.2.1 | | | | |
| **Receiver** | | | | | | |
| **Differential Voltage Pk-Pk** | TP4 | | | 900 | mV | |
| **Common-Mode Voltage (Vcm)** | TP4 | -350 | | 2850 | mV | 2 |
| **Common-Mode Noise (RMS)** | TP4 | | | 17.5 | mV | 3 |
| **Differential Termination Resistance Mismatch** | TP4 | | | 10 | % | |
| **Differential Return Loss (SDD22)** | TP4 | | | See CEI-28G-VSR Equation 13-19 | | |
| **Common-Mode to Differential Conversion and Differential to Common-Mode Conversion (SDC22, SCD22)** | TP4 | | | See CEI-28G-VSR Equation 13-21 | | |
| **Common-Mode Return Loss (SCC22)** | TP4 | | | -2 | dB | 4 |
| **Transition Time (20-80%)** | TP4 | 9.5 | | 5.5 | dB | |
| **Vertical Eye Closure (VEC)** | TP4 | | | 5.5 | dB | |
| **Eye Width at $10^{-15}$ Probability (EW15)** | TP4 | 0.57 | | | UI | |
| **Eye Width at $10^{-15}$ Probability (EH15)** | TP4 | 228 | | | mV | |

**Notes:**

1. Per terminal.
2. Vcm is generated by the host. Specification includes the effects of ground offset voltage.
3. At 1MHz.
4. From 250MHz to 30GHz.

**QSFP28 Pin Descriptions**

| Pin | Logic | Symbol | Name/Description | Notes |
|---|---|---|---|---|
| **1** | | GND | Module Ground. | 1 |
| **2** | CML-I | Tx2- | Transmitter Inverted Data Input. | |
| **3** | CML-I | Tx2+ | Transmitter Non-Inverted Data Output. | |
| **4** | | GND | Module Ground. | 1 |
| **5** | CML-I | Tx4- | Transmitter Inverted Data Input. | |
| **6** | CML-I | Tx4+ | Transmitter Non-Inverted Data Output. | |
| **7** | | GND | Module Ground. | 1 |
| **8** | LVTTL-I | ModSelL | Module Select. | |
| **9** | LVTTL-I | ResetL | Module Reset. | |
| **10** | | VccRx | +3.3V Receiver Power Supply. | 2 |
| **11** | LVCMOS-I/O | SCL | 2-Wire Serial Interface Clock. | |
| **12** | LVCMOS-I/O | SDA | 2-Wire Serial Interface Data. | |
| **13** | | GND | Module Ground. | |
| **14** | CML-O | Rx3+ | Receiver Non-Inverted Data Output. | |
| **15** | CML-O | Rx3- | Receiver Inverted Data Output. | |
| **16** | | GND | Module Ground. | 1 |
| **17** | CML-O | Rx1+ | Receiver Non-Inverted Data Output. | |
| **18** | CML-O | Rx1- | Receiver Inverted Data Output. | |
| **19** | | GND | Module Ground. | 1 |
| **20** | | GND | Module Ground. | 1 |
| **21** | CML-O | Rx2- | Receiver Inverted Data Output. | |
| **22** | CML-O | Rx2+ | Receiver Non-Inverted Data Output. | |
| **23** | | GND | Module Ground. | 1 |
| **24** | CML-O | Rx4- | Receiver Inverted Data Output. | 1 |
| **25** | CML-O | Rx4+ | Receiver Non-Inverted Data Output. | |
| **26** | | GND | Module Ground. | 1 |
| **27** | LVTTL-O | ModPrsL | Module Present. | |
| **28** | LVTTL-O | IntL | Interrupt. | |
| **29** | | VccTx | +3.3V Transmitter Power Supply. | 2 |
| **30** | | Vcc1 | +3.3V Power Supply. | 2 |
| **31** | LVTTL-I | LPMode | Low-Power Mode. | |
| **32** | | GND | Module Ground. | 1 |
| **33** | CML-I | Tx3+ | Transmitter Non-Inverted Data Input. | |
| **34** | CML-I | Tx3- | Transmitter Inverted Data Output. | |

| | | | | |
|---|---|---|---|---|
| **35** | | GND | Module Ground. | 1 |
| **36** | CML-I | Tx1+ | Transmitter Non-Inverted Data Input. | |
| **37** | CML-I | Tx1- | Transmitter Inverted Data Output. | |
| **38** | | GND | Module Ground. | 1 |

**Notes:**

1. GND is the symbol for signal and supply (power) common for QSFP28 modules. All are common within the QSFP28 module, and all module voltages are referenced to this potential unless otherwise noted. Connect these directly to the host board signal common ground plane.
2. VccRx, Vcc1, and VccTx are the receiving and transmission power supplies and shall be applied concurrently. Recommended host board power supply filtering is shown below. VccRx, Vcc1, and VccTx may be internally connected within the QSFP28 transceiver module in any combination. The connector pins are each rated for a maximum current of 1000mA.

**QSFP28 Connector**

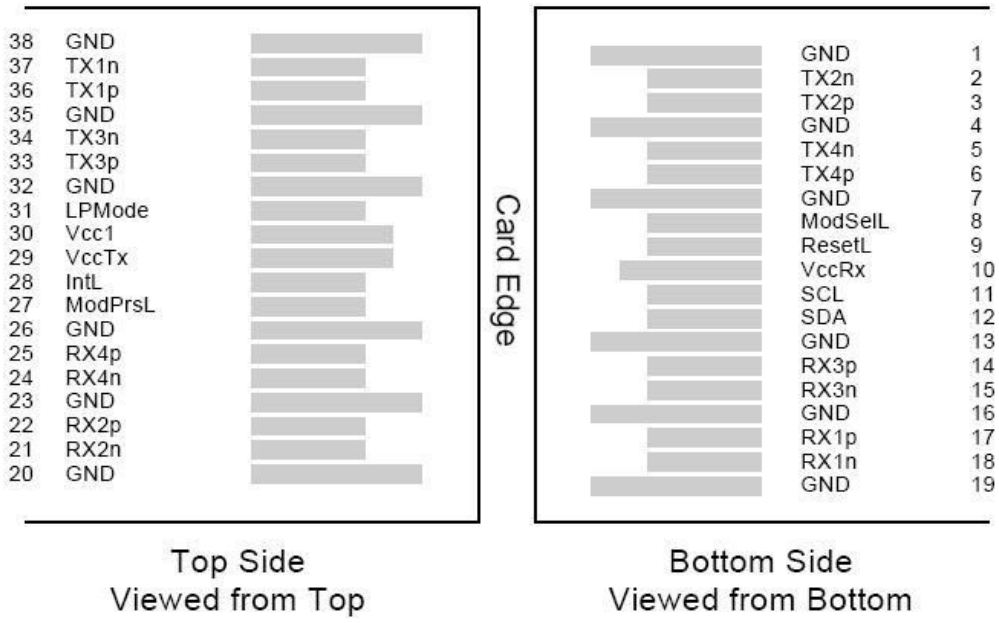

**SFP28 Pin Descriptions**

| Pin | Logic | Symbol | Name/Description | Notes |
|---|---|---|---|---|
| **1** | | VeeT | Module Transmitter Ground. | 1 |
| **2** | LVTTL-O | Tx_Fault | Module Transmitter Fault. | |
| **3** | LVTTL-I | Tx_Disable | Transmitter Disable. Turns off the transmitter's laser output. | |
| **4** | LVTTL-I/O | SDA | 2-Wire Serial Interface Data. | 2 |
| **5** | LVTTL-I | SCL | 2-Wire Serial Interface Clock. | 2 |
| **6** | | MOD_DEF0 | Module Definition 0. Grounded within the module. | |
| **7** | LVTTL-I | RS0 | Receiver Rate Select. | |
| **8** | LVTTL-O | Rx_LOS | Receiver Loss of Signal Indication. Active LOW. | |
| **9** | LVTTL-I | RS1 | Transmitter Rate Select. Not Used. | |
| **10** | | VeeR | Module Receiver Ground. | 1 |
| **11** | | VeeR | Module Receiver Ground. | 1 |
| **12** | CML-O | RD- | Receiver Inverted Data Output. | |
| **13** | CML-O | RD+ | Receiver Data Output. | |
| **14** | | VeeR | Module Receiver Ground. | 1 |
| **15** | | VccR | Module Receiver +3.3V Supply. | |
| **16** | | VccT | Module Receiver +3.3V Supply. | |
| **17** | | VeeT | Module Transmitter Ground. | 1 |
| **18** | CML-I | TD+ | Transmitter Non-Inverted Data Input. | |
| **19** | CML-I | TD- | Transmitter Inverted Data Input. | |
| **20** | | VeeT | Module Transmitter Ground. | 1 |

**Notes:**

1. Module ground pins (GND) are isolated from the module case.
2. Shall be pulled up with 4.7kΩ to 10kΩ to a voltage between 3.15V and 3.45V on the host board.

**SFP28 Module Interface**

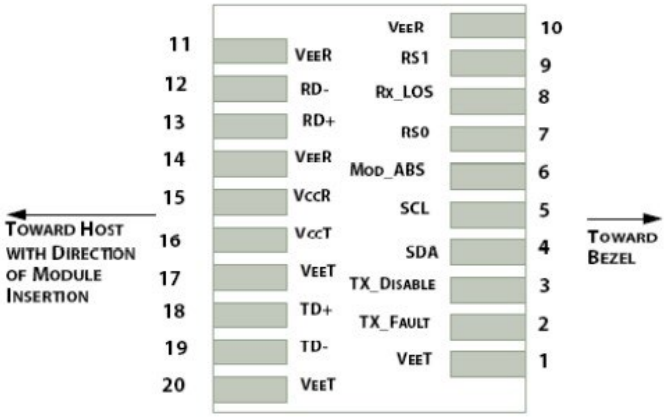

**SFP28 Module Contact Assignment**

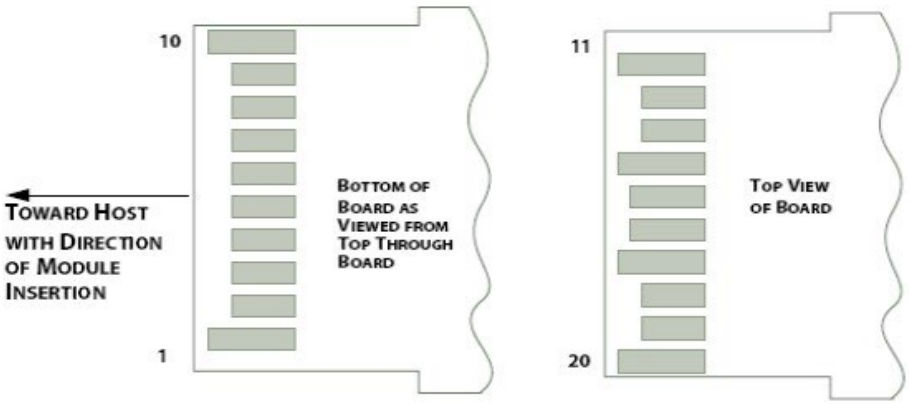


**QSFP28 Recommended Power Supply**

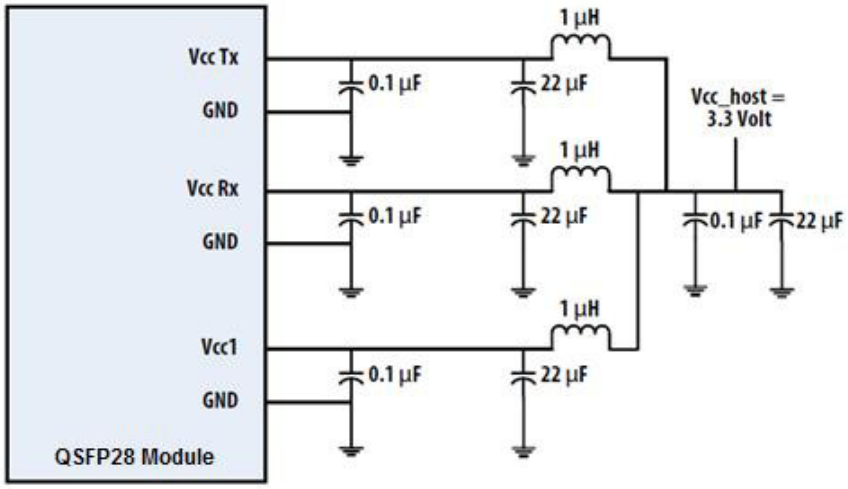


**SFP28 Recommended Power Supply**

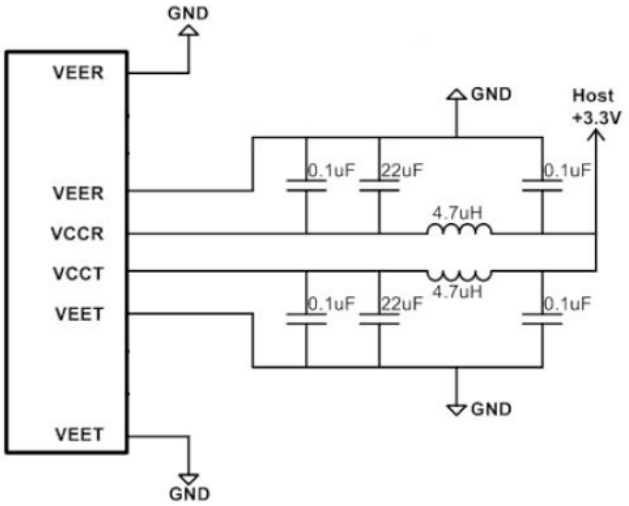

**QSFP28 Mechanical Specifications**

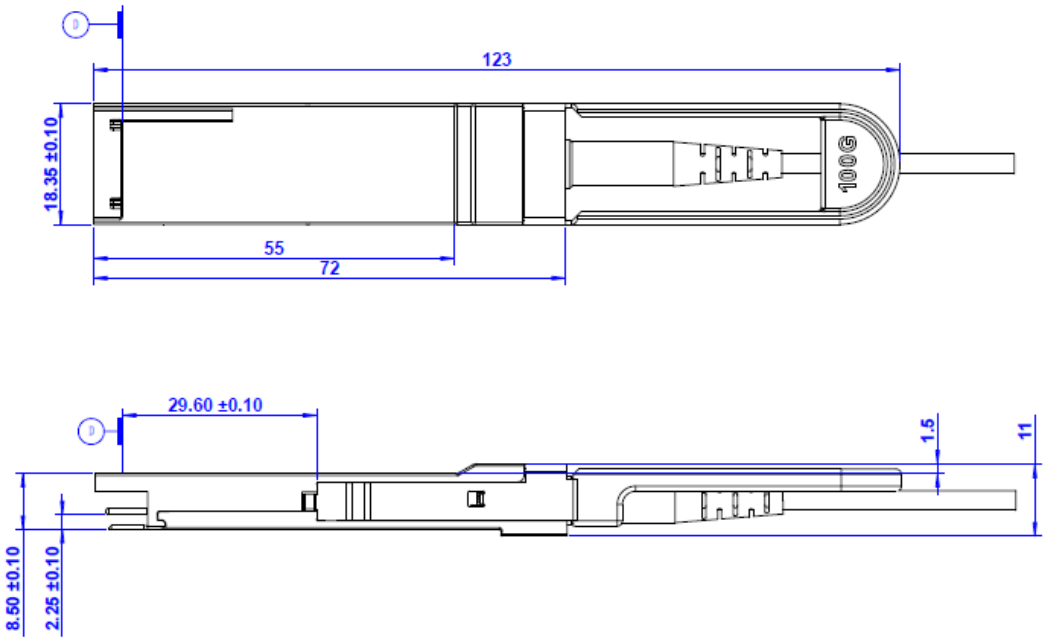


**SFP28 Mechanical Specifications**

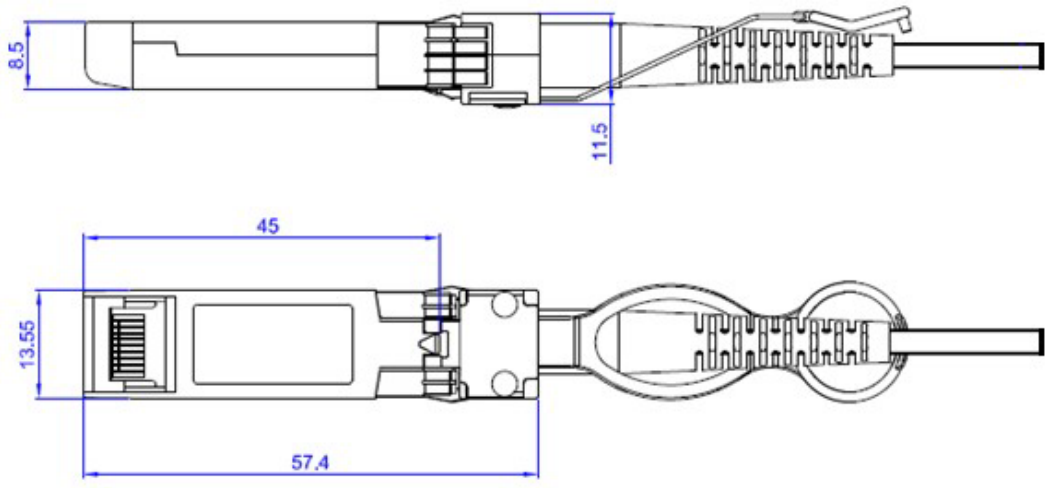

**About ProLabs**

Our extensive experience comes as standard. For over 20 years ProLabs has delivered optical connectivity solutions that give our customers freedom and choice through our ability to provide seamless interoperability. At the heart of our company is the ability to provide state-of-the-art optical transport and connectivity solutions that are compatible with more than 100 optical switching and transport platforms.

**A Complete Portfolio of Network Solutions**

ProLabs is focused on innovations in optical transport and connectivity. The combination of our knowledge of optics and networking equipment enables ProLabs to be your single source for optical transport and connectivity solutions from 100Mb to 1.6T while providing innovative solutions that increase network efficiency. We provide the optical connectivity expertise that is compatible with and enhances your switching and transport equipment.

**The Trusted Partner**

Customer service is our number one value. ProLabs has invested in people, labs and manufacturing capacity to ensure compatible products, and immediate answers to your questions. With Engineering and Manufacturing offices in the U.K. and U.S. augmented by field offices throughout the U.S., U.K. and Asia, ProLabs is able to be our customers best advocate 24 hours a day.




**Contact Information**

ProLabs US

Email: sales@prolabs.com
Telephone: 952-852-0252

ProLabs UK

Email: salessupport@prolabs.com
Telephone: +44 1285 719 600