**AFBR-79EIDZ-C**

Avago® AFBR-79EIDZ Compatible TAA 40GBase-SR4 QSFP+ Transceiver (MMF, 850nm, 150m, MPO, DOM)

**Features:**

- SFF-8436 Compliance
- MPO Connector
- Multi-mode Fiber
- Commercial Temperature 0 to 70 Celsius
- Hot Pluggable
- Metal with Lower EMI
- Excellent ESD Protection
- RoHS Compliant and Lead Free

**Applications:**

- 40GBase Ethernet
- 4x10G Breakout Option
- Access and Enterprise

**Product Description**

This Avago® AFBR-79EIDZ compatible QSFP+ transceiver provides 40GBase-SR4 throughput up to 150m over multi-mode fiber (MMF) using a wavelength of 850nm via an MPO connector. Our transceiver is built to meet or exceed OEM specifications and is guaranteed to be 100% compatible with Avago®. It has been programmed, uniquely serialized, and tested for data-traffic and application to ensure that it will initialize and perform identically. All of our transceivers comply with Multi-Source Agreement (MSA) standards to provide seamless network integration. Additional product features include Digital Optical Monitoring (DOM) support which allows access to real-time operating parameters. This transceiver is Trade Agreements Act (TAA) compliant. We stand behind the quality of our products and proudly offer a limited lifetime warranty.

ProLabs' transceivers are RoHS compliant and lead-free.

TAA refers to the Trade Agreements Act (19 U.S.C. & 2501-2581), which is intended to foster fair and open international trade. TAA requires that the U.S. Government may acquire only "U.S.-made or designated country end products.")

**Rev. 012026**

## Absolute Maximum Ratings

| Parameter | Symbol | Min. | Typ. | Max. | Unit |
|---|---|---|---|---|---|
| **Supply Voltage** | Vcc | -0.5 | | 4.0 | V |
| **Storage Temperature** | Tstg | -40 | | 85 | °C |
| **Operating Case Temperature** | Tc | 0 | 25 | 70 | °C |
| **Relative Humidity** | RH | 5 | | 95 | % |
| **Data Rate Per Channel** | | | 10.3125 | | Gbps |

## Electrical Characteristics

| Parameter | Symbol | Min. | Typ. | Max. | Unit | Notes |
|---|---|---|---|---|---|---|
| **Supply Voltage** | Vcc | 3.135 | 3.3 | 3.465 | V | |
| **Module Supply Current** | Icc | | | 430 | mA | |
| **Power Dissipation** | $P_{DISS}$ | | | 1.5 | W | |
| **Transmitter** | | | | | | |
| **Input Differential Impedance** | ZIN | | 100 | | Ω | |
| **Differential Data Input Swing** | VIN,pp | 180 | | 900 | mVp-p | |
| **Receiver** | | | | | | |
| **Output Differential Impedance** | ZOUT | | 100 | | Ω | |
| **Differential Data Output Swing** | VOUT,pp | 300 | | 850 | mVp-p | 1 |
| **Data Output Rise Time/Fall Time** | Tr/Tf | 28 | | | ps | 2 |

**Notes:**

1. Internally AC coupled but requires an external 100Ω differential load termination.
2. 20 – 80 %.

## Optical Characteristics

| Parameter | Symbol | Min. | Typ. | Max. | Unit | Notes |
|---|---|---|---|---|---|---|
| **Transmitter** | | | | | | |
| **Launch Optical Power** | Po | -7.6 | | +2.4 | dBm | 1 |
| **Center Wavelength Range** | λC | 830 | 850 | 860 | nm | |
| **Extinction Ratio** | ER | 3 | | | dB | 2 |
| **Spectral Width (RMS)** | Δλ | | | 0.65 | nm | |
| **Transmitter and Dispersion Penalty** | TDP | | | 3.2 | dB | |
| **Optical Return Loss Tolerance** | ORLT | | | 12 | dB | |
| **Eye Diagram** | IEEE Std 802.3ba Compatible | | | | | |
| **Receiver** | | | | | | |
| **Center Wavelength** | λC | 830 | 850 | 860 | nm | |
| **Receiver Sensitivity ($P_{avg}$)** | S | | | -9.5 | dBm | 3 |
| **Damage Threshold** | $P_{OL}$ | 2.5 | | | dBm | 3 |
| **Optical Return Loss** | ORL | 12 | | | dB | |
| **LOS Assert** | LOSA | -30 | | | dBm | |
| **LOS De-Assert** | LOSD | | | -11 | dBm | |
| **LOS Hysteresis** | | 0.5 | | | dB | |

**Notes:**

1. The optical power is launched into OM3 MMF.
2. Measured with a PRBS $2^{31}$-1 test pattern @10.3125Gbps.
3. Measured with PRBS $2^{31}$-1 test pattern, 10.3125Gbps, and BER<$10^{-12}$.

**Pin Descriptions**

| Pin | Logic | Symbol | Name/Descriptions | Notes |
|---|---|---|---|---|
| **1** | | GND | Module Ground. | 1 |
| **2** | CML-I | Tx2- | Transmitter Inverted Data Input. | |
| **3** | CML-I | Tx2+ | Transmitter Non-Inverted Data Input. | |
| **4** | | GND | Module Ground. | 1 |
| **5** | CML-I | Tx4- | Transmitter Inverted Data Input. | |
| **6** | CML-I | Tx4+ | Transmitter Non-Inverted Data Input. | |
| **7** | | GND | Module Ground. | 1 |
| **8** | LVTTL-I | ModSelL | Module Select. | 2 |
| **9** | LVTTL-I | ResetL | Module Reset. | 2 |
| **10** | | VccRx | +3.3V Receiver Power Supply. | |
| **11** | LVCMOS-I | SCL | 2-Wire Serial Interface Clock. | 2 |
| **12** | LVCMOS-I/O | SDA | 2-Wire Serial Interface Data. | 2 |
| **13** | | GND | Module Ground. | 1 |
| **14** | CML-O | Rx3+ | Receiver Non-Inverted Data Output. | |
| **15** | CML-O | Rx3- | Receiver Inverted Data Output. | |
| **16** | | GND | Module Ground. | 1 |
| **17** | CML-O | Rx1+ | Receiver Non-Inverted Data Output. | |
| **18** | CML-O | Rx1- | Receiver Inverted Data Output. | |
| **19** | | GND | Module Ground. | 1 |
| **20** | | GND | Module Ground. | 1 |
| **21** | CML-O | Rx2- | Receiver Inverted Data Output. | |
| **22** | CML-O | Rx2+ | Receiver Non-Inverted Data Output. | |
| **23** | | GND | Module Ground. | 1 |
| **24** | CML-O | Rx4- | Receiver Inverted Data Output. | 1 |
| **25** | CML-O | Rx4+ | Receiver Non-Inverted Data Output. | |
| **26** | | GND | Module Ground. | 1 |
| **27** | LVTTL-O | ModPrsL | Module Present. Internally pulled down to GND. | |
| **28** | LVTTL-O | IntL | Interrupt Output. Should be pulled up on the host board. | 2 |
| **29** | | VccTx | +3.3V Transmitter Power Supply. | |
| **30** | | Vcc1 | +3.3V Power Supply. | |
| **31** | LVTTL-I | LPMode | Low-Power Mode. | 2 |
| **32** | | GND | Module Ground. | 1 |
| **33** | CML-I | Tx3+ | Transmitter Non-Inverted Data Input. | |
| **34** | CML-I | Tx3- | Transmitter Inverted Data Input. | |

| | | | | |
|---|---|---|---|---|
| **35** | | GND | Module Ground. | 1 |
| **36** | CML-I | Tx1+ | Transmitter Non-Inverted Data Input. | |
| **37** | CML-I | Tx1- | Transmitter Inverted Data Input. | |
| **38** | | GND | Module Ground. | 1 |

**Notes:**

1. The module signal grounds are isolated from the module case.
2. This is an open collector/drain output that on the host board requires a 4.7kΩ-10kΩ pull-up resistor to the Host_Vcc.

**Electrical Pin-Out Details**

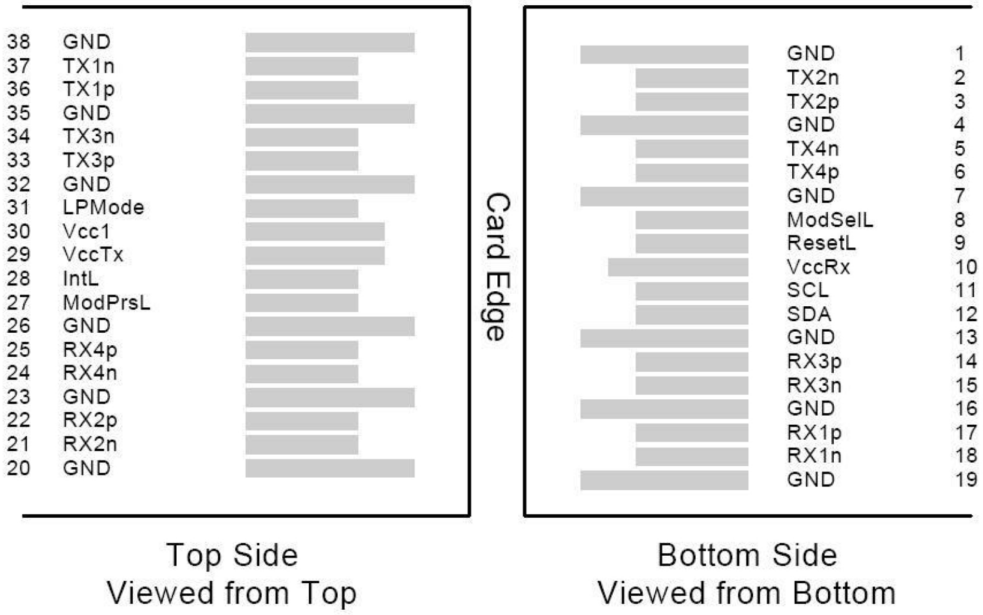

**Recommended Host Board Power Supply Filter Network**

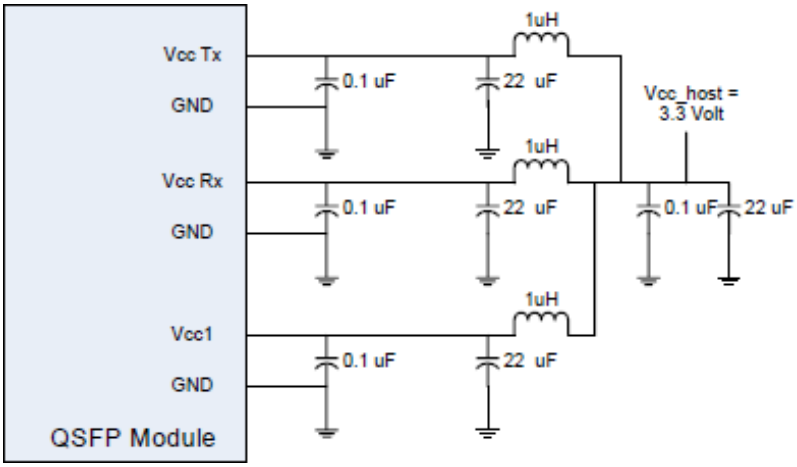


**Mechanical Specifications**

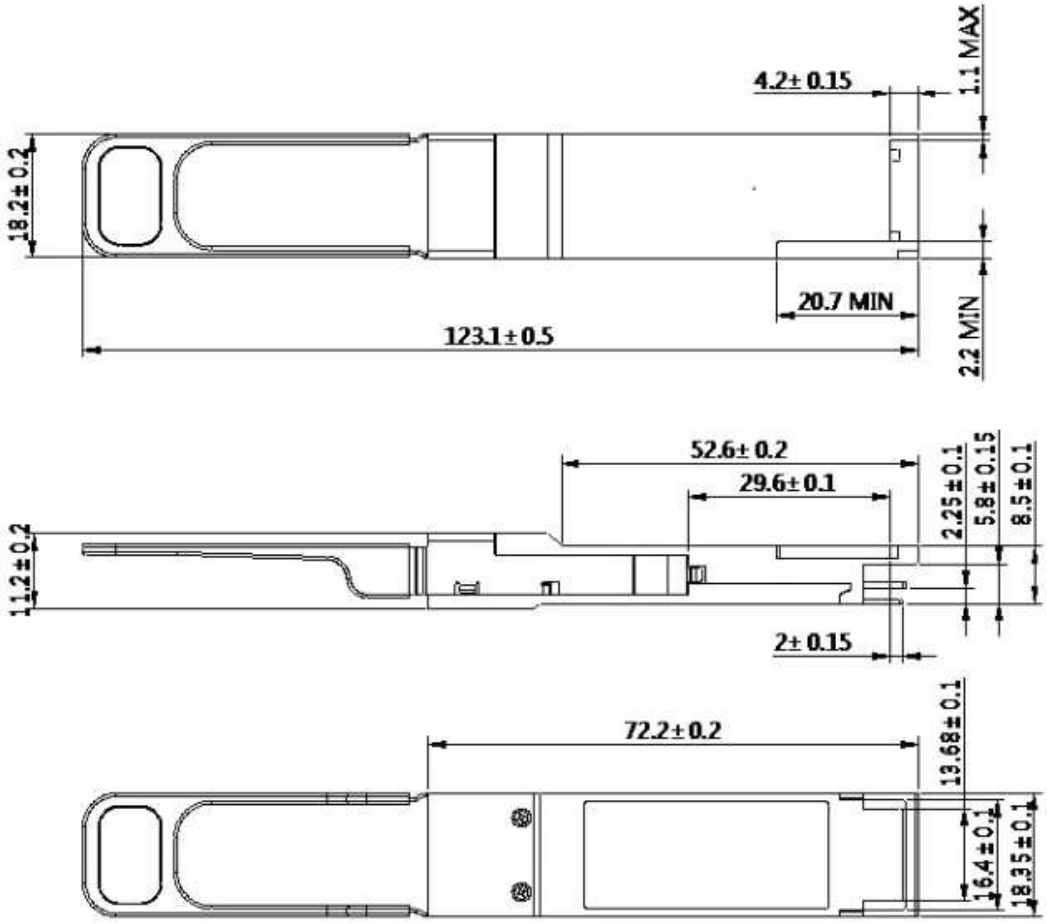

**About ProLabs**

Our extensive experience comes as standard. For over 20 years ProLabs has delivered optical connectivity solutions that give our customers freedom and choice through our ability to provide seamless interoperability. At the heart of our company is the ability to provide state-of-the-art optical transport and connectivity solutions that are compatible with more than 100 optical switching and transport platforms.

**A Complete Portfolio of Network Solutions**

ProLabs is focused on innovations in optical transport and connectivity. The combination of our knowledge of optics and networking equipment enables ProLabs to be your single source for optical transport and connectivity solutions from 100Mb to 1.6T while providing innovative solutions that increase network efficiency. We provide the optical connectivity expertise that is compatible with and enhances your switching and transport equipment.

**The Trusted Partner**

Customer service is our number one value. ProLabs has invested in people, labs and manufacturing capacity to ensure compatible products, and immediate answers to your questions. With Engineering and Manufacturing offices in the U.K. and U.S. augmented by field offices throughout the U.S., U.K. and Asia, ProLabs is able to be our customers best advocate 24 hours a day.

**Contact Information**

ProLabs US

Email: sales@prolabs.com
Telephone: 952-852-0252

ProLabs UK

Email: salessupport@prolabs.com
Telephone: +44 1285 719 600