3AL82188AA-C

Alcatel-Lucent Nokia® 3AL82188AA Compatible TAA Compliant 400GBase-FR4 QSFP-DD Transceiver (SMF, 1310nm, 2km, LC)

Features:

- INF-8628 Compliance
- Duplex LC Connector
- Single-mode Fiber
- Commercial Temperature 0 to 70 Celsius
- Hot Pluggable
- Metal with Lower EMI
- Excellent ESD Protection
- RoHS Compliant and Lead Free

Applications:

- 400GBase Ethernet
- Access and Enterprise

Product Description

This Alcatel-Lucent Nokia® 3AL82188AA compatible QSFP-DD transceiver provides 400GBase-FR4 throughput up to 2km over single-mode fiber (SMF) using a wavelength of 1310nm via an LC connector. It is guaranteed to be 100% compatible with the equivalent Alcatel-Lucent Nokia® transceiver. This easy to install, hot swappable transceiver has been programmed, uniquely serialized and data-traffic and application tested to ensure that it will initialize and perform identically. Digital optical monitoring (DOM) support is also present to allow access to real-time operating parameters. This transceiver is Trade Agreements Act (TAA) compliant. We stand behind the quality of our products and proudly offer a limited lifetime warranty.

ProLabs' transceivers are RoHS compliant and lead-free.

TAA refers to the Trade Agreements Act (19 U.S.C. & 2501-2581), which is intended to foster fair and open international trade. TAA requires that the U.S. Government may acquire only "U.S.-made or designated country end products.")

Rev. 012026

Regulatory Compliance

- ESD to the Electrical PINs: compatible with MIL-STD-883E Method 3015.4
- ESD to the LC Receptacle: compatible with IEC 61000-4-3
- EMI/EMC compatible with FCC Part 15 Subpart B Rules, EN55022:2010
- Laser Eye Safety compatible with FDA 21CFR, EN60950-1& EN (IEC) 60825-1,2
- RoHS compliant with EU RoHS 2.0 directive 2015/863/EU

Absolute Maximum Ratings

Parameter	Symbol	Min.	Max.	Unit
Power Supply Voltage	V_{CC}	-0.5	3.6	V
Storage Temperature	Ts	-40	85	°C
Case Operating Temperature	Top	0	70	°C
Relative Humidity (non-condensing)	RH	0	85	%

Recommended Operating Conditions

Parameter	Symbol	Min.	Typ.	Max.	Unit	Notes
Operating Case Temperature	TOP	0		70	°C	
Power Supply Voltage	V_{CC}	3.135	3.3	3.465	V	
Data Rate, each Lane			26.5625		GBd	PAM4
Data Rate Accuracy		-100		100	ppm	
Pre-FEC Bit Error Ratio				2.4×10^{-4}		
Post-FEC Bit Error Ratio				1×10^{-12}		1
Link Distance	D	0.5		2000	m	2

Notes:

1. FEC provided by host system.
2. FEC required on host system to support maximum distance.

Electrical Characteristics

Parameter	Symbol	Min.	Typ.	Max.	Unit	Notes
Power Consumption				12	W	
Supply Current	Icc			3.64	A	
Transceiver Power-on Initialization Time				2000	ms	1
Transmitter (each lane)						
Signaling Rate, each Lane	TP1	26.5625 ± 100 ppm			GBd	
Differential pk-pk Input Voltage Tolerance	TP1a	900			mVpp	1
Differential Termination Mismatch	TP1			10	%	
Differential Input Return Loss	TP1	IEEE 802.3-2015 Equation (83E-5)			dB	
Differential to Common Mode Input Return Loss	TP1	IEEE 802.3-2015 Equation (83E-6)			dB	
Module Stressed Input Test	TP1a	See IEEE 802.3bs 120E.3.4.1				2
Single-ended Voltage Tolerance Range (Min)	TP1a	-0.4 to 3.3			V	
DC Common Mode Input Voltage	TP1	-350		2850	mV	3
Receiver (each lane)						
Signaling Rate, each lane	TP4	26.5625 ± 100 ppm			GBd	
Differential Peak-to-Peak Output Voltage	TP4			900	mVpp	
AC Common Mode Output Voltage, RMS	TP4			17.5	mV	
Differential Termination Mismatch	TP4			10	%	
Differential Output Return Loss	TP4	IEEE 802.3-2015 Equation (83E-2)				
Common to Differential Mode Conversion Return Loss	TP4	IEEE 802.3-2015 Equation (83E-3)				
Transition Time, 20% to 80%	TP4	9.5			ps	
Near-end Eye Symmetry Mask Width (ESMW)	TP4		0.265		UI	
Near-end Eye Height, Differential	TP4	70			mV	
Far-end Eye Symmetry Mask Width (ESMW)	TP4		0.2		UI	
Far-end Eye Height, Differential	TP4	30			mV	
Far-end Pre-cursor ISI Ratio	TP4	-4.5		2.5	%	
Common Mode Output Voltage (Vcm)	TP4	-350		2850	mV	3

Notes:

1. With the exception to IEEE 802.3bs 120E.3.1.2 that the pattern is PRBS31Q or scrambled idle.
2. Meets BER specified in IEEE 802.3bs 120E.1.1.
3. DC common mode voltage generated by the host. Specification includes effects of ground offset voltage.

Optical Characteristics

Parameter	Symbol	Min.	Typ.	Max.	Unit	Notes
Lane Wavelength	L0	1264.5	1271	1277.5	nm	
	L1	1284.5	1291	1297.5		
	L2	1304.5	1311	1317.5		
	L3	1324.5	1331	1337.5		
Transmitter						
Data Rate, each Lane		53.125 ± 100 ppm			GBd	
Modulation Format		PAM4				
Side-mode Suppression Ratio	SMSR	30			dB	Modulated
Total Average Launch Power	P_T			9.3	dBm	
Average Launch Power, each Lane	P_{AVG}	-3.3		3.5	dBm	1
Outer Optical Modulation Amplitude (OMA_{outer}), each Lane	P_{OMA}	-0.3		3.7	dBm	2
Launch Power in OMA_{outer} minus TDECQ, each Lane		-1.7			dB	For ER ≥4.5dB
Launch Power in OMA_{outer} minus TDECQ, each Lane		-1.6			dB	For ER <4.5dB
Transmitter and Dispersion Eye Closer for PAM4, each Lane	TDECQ			3.4	dB	
Extinction Ratio	ER	3.5			dB	
Difference in Launch Power between any Two Lanes (OMA_{outer})				4	dB	
$RIN_{17.1}$ OMA	RIN			-136	dB/Hz	
Optical Return Loss Tolerance	TOL			17.1	dB	
Transmitter Reflectance	T_R			-26	dB	
Average Launch Power of OFF Transmitter, each Lane	P_{off}			-20	dBm	
Receiver						
Data Rate, each Lane		53.125 ± 100 ppm			GBd	
Modulation Format		PAM4				
Damage Threshold, each Lane	TH_d	4.5			dBm	3
Average Receive Power, each Lane		-7.3		3.5	dBm	4
Receive Power (OMA_{outer}), each Lane				3.7	dBm	
Difference in Receiver Power between any Two Lanes (OMA_{outer})				4.1	dB	
Receiver Sensitivity (OMA_{outer}), each Lane	SEN			-5.0	dBm	For BER of 2.4E-4
Stressed Receiver Sensitivity (OMA_{outer}), each Lane	SRS	See Figure Below			dBm	5
Receiver Reflectance	R_R			-26	dB	
LOS Assert	LOSA	-30			dBm	
LOS De-assert	LOSD			-12	dBm	
LOS Hysteresis	LOSH	0.5			dB	

Stressed Conditions for Stress Receiver Sensitivity (Note 6)						
Stressed Eye Closure for PAM4 (SECQ), Lane under Test		0.9		3.4	dB	
OMAouter of each Aggressor Lane			1.5		dBm	

Notes:

1. Average launch power, each lane (min) is informative and not the principal indicator of signal strength. A transmitter with launch power below this value cannot be compliant; however, a value above this does not ensure compliance.
2. Even if the TDECQ < 1.4 dB for an extinction ratio of ≥ 4.5 dB or TDECQ < 1.3 dB for an extinction ratio of < 4.5 dB, the OMA_{outer} (min) must exceed the minimum value specified here.
3. The receiver shall be able to tolerate, without damage, continuous exposure to an optical input signal having this average power level.
4. Average receive power, each lane (min) is informative and not the principal indicator of signal strength. A received power below this value cannot be compliant; however, a value above this does not ensure compliance.
5. Measured with conformance test signal for BER = 2.4×10^{-4}. A compliant receiver shall have stressed receiver sensitivity (OMA_{outer}), each lane values below the mask of the figure below, for SECQ values between 0.9 and 3.4 dB.
6. These test conditions are for measuring stressed receiver sensitivity. They are not characteristics of the receiver.

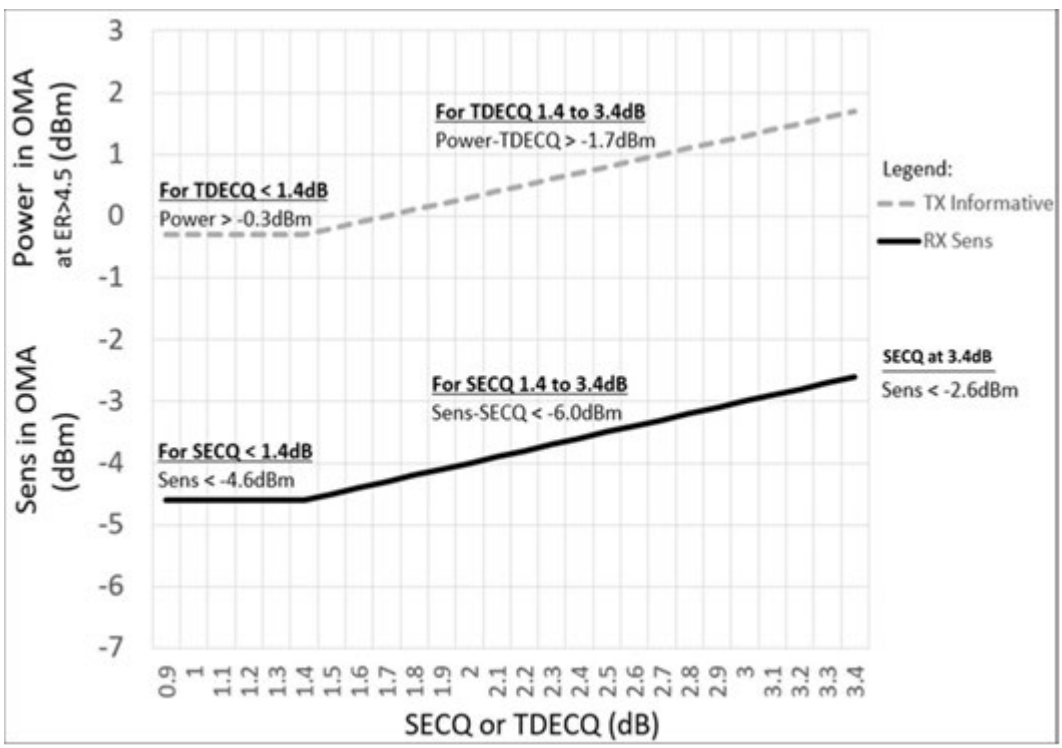

Pin Descriptions

Pin	Logic	Symbol	Name/Descriptions	Plug Sequence
1		GND	Ground	1B
2	CML-I	Tx2n	Transmitter Inverted Data Input	3B
3	CML-I	Tx2p	Transmitter Non-Inverted Data Input	3B
4		GND	Ground	1B
5	CML-I	Tx4n	Transmitter Inverted Data Input	3B
6	CML-I	Tx4p	Transmitter Non-Inverted Data Input	3B
7		GND	Ground	1B
8	LVTTL-I	ModSelL	Module Select	3B
9	LVTTL-I	ResetL	Module Reset	3B
10		VccRx	+3.3V Power Supply Receiver	2B
11	LVCMOS-I/O	SCL	2-wire serial interface clock	3B
12	LVCMOS-I/O	SDA	2-wire serial interface data	3B
13		GND	Ground	1B
14	CML-O	Rx3p	Receiver Non-Inverted Data Output	3B
15	CML-O	Rx3n	Receiver Inverted Data Output	3B
16	GND	Ground	1B	
17	CML-O	Rx1p	Receiver Non-Inverted Data Output	3B
18	CML-O	Rx1n	Receiver Inverted Data Output	3B
19		GND	Ground	1B
20		GND	Ground	1B
21	CML-O	Rx2n	Receiver Inverted Data Output	3B
22	CML-O	Rx2p	Receiver Non-Inverted Data Output	3B
23		GND	Ground	1B
24	CML-O	Rx4n	Receiver Inverted Data Output	3B
25	CML-O	Rx4p	Receiver Non-Inverted Data Output	3B
26		GND	Ground	1B
27	LVTTL-O	ModPrsL	Module Present	3B
28	LVTTL-O	IntL	Interrupt	3B
29		VccTx	+3.3V Power supply transmitter	2B
30		Vcc1	+3.3V Power supply	2B
31	LVTTL-I	InitMode	Initialization mode; In legacy QSFP applications, the InitMode pad is called LPMODE	3B
32		GND	Ground	1B
33	CML-I	Tx3p	Transmitter Non-Inverted Data Input	3B
34	CML-I	Tx3n	Transmitter Inverted Data Input	3B
35		GND	Ground	1B
36	CML-I	Tx1p	Transmitter Non-Inverted Data Input	3B
37	CML-I	Tx1n	Transmitter Inverted Data Input	3B
38		GND	Ground	1B
39		GND	Ground	1A
40	CML-I	Tx6n	Transmitter Inverted Data Input	3A

41	CML-I	Tx6p	Transmitter Non-Inverted Data Input	3A
42		GND	Ground	1A
43	CML-I	Tx8n	Transmitter Inverted Data Input	3A
44	CML-I	Tx8p	Transmitter Non-Inverted Data Input	3A
45		GND	Ground	1A
46		Reserved	For future use	3A
47		VS1	Module Vendor Specific 1	3A
48		VccRx1	3.3V Power Supply	2A
49		VS2	Module Vendor Specific 2	3A
50		VS3	Module Vendor Specific 3	3A
51		GND	Ground	1A
52	CML-O	Rx7p	Receiver Non-Inverted Data Output	3A
53	CML-O	Rx7n	Receiver Inverted Data Output	3A
54		GND	Ground	1A
55	CML-O	Rx5p	Receiver Non-Inverted Data Output	3A
56	CML-O	Rx5n	Receiver Inverted Data Output	3A
57		GND	Ground	1A
58		GND	Ground	1A
59	CML-O	Rx6n	Receiver Inverted Data Output	3A
60	CML-O	Rx6p	Receiver Non-Inverted Data Output	3A
61		GND	Ground	1A
62	CML-O	Rx8n	Receiver Inverted Data Output	3A
63	CML-O	Rx8p	Receiver Non-Inverted Data Output	3A
67		GND	Ground	1A
68		NC	No Connect	3A
69		Reserved	For future use	3A
70		VccTx1	3.3V Power Supply	2A
71		Vcc2	3.3V Power Supply	2A
72		Reserved	For Future Use	3A
73		GND	Ground	1A
74	CML-I	Tx7p	Transmitter Non-Inverted Data Input	3A
75	CML-I	Tx7n	Transmitter Inverted Data Input	3A
76		GND	Ground	1A

MSA Compliant Connector

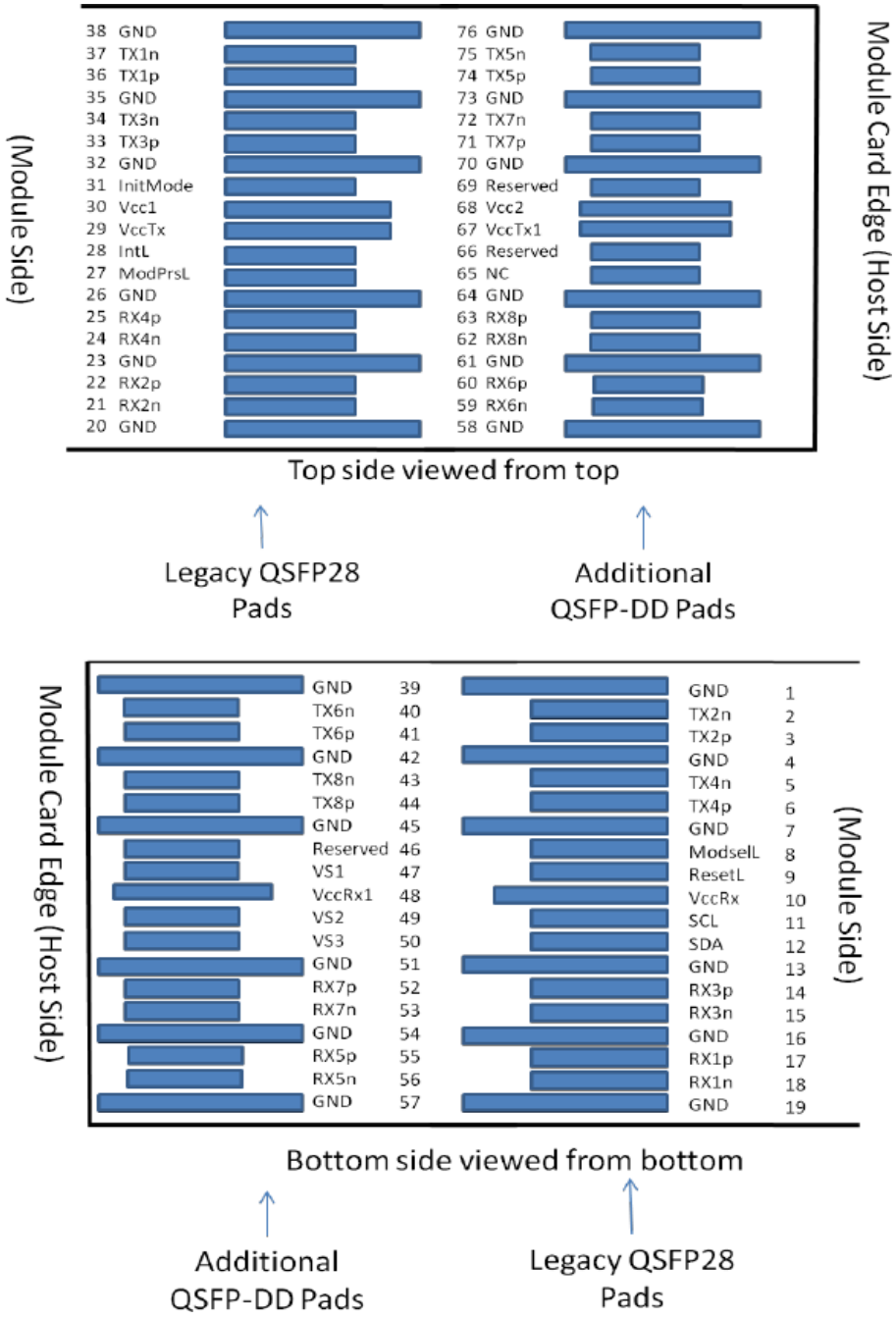

Recommended Power Supply Filter

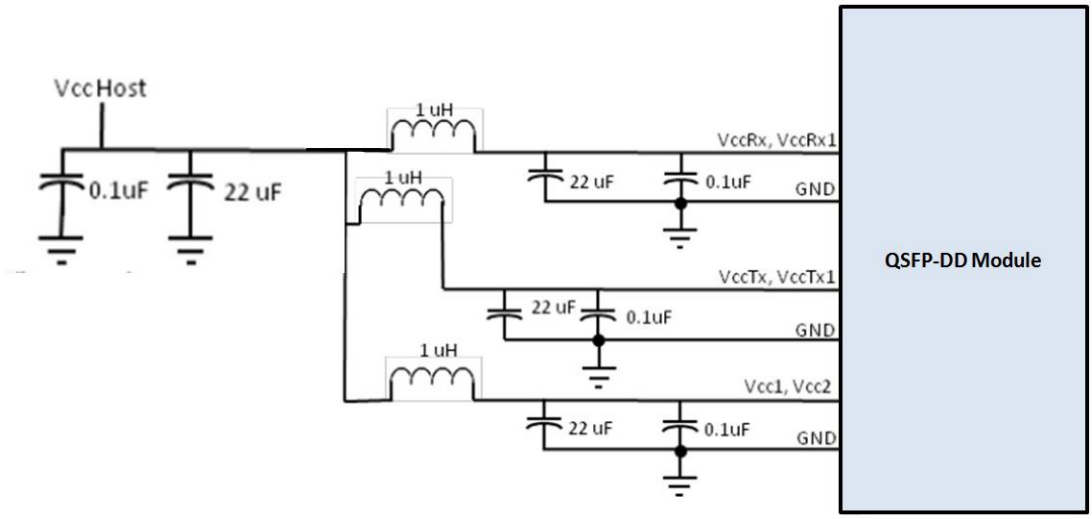

Digital Diagnostic Functions

The following digital diagnostic characteristics are defined over the normal operating conditions unless otherwise specified.

Parameter	Symbol	Min	Max	Units	Notes
Temperature monitor absolute error	DMI_Temp	-3	3	degC	Over operating temperature range
Supply voltage monitor absolute error	DMI _VCC	-0.1	0.1	V	Over full operating range
Channel RX power monitor absolute error	DMI_RX_Ch	-2	2	dB	1
Channel Bias current monitor	DMI_Ibias_Ch	-10%	10%	mA	
Channel TX power monitor absolute error	DMI_TX_Ch	-2	2	dB	1

Notes:

1. Due to measurement accuracy of different single mode fibers, there could be an additional +/-1 dB fluctuation, or a +/- 3 dB total accuracy.

Mechanical Specifications

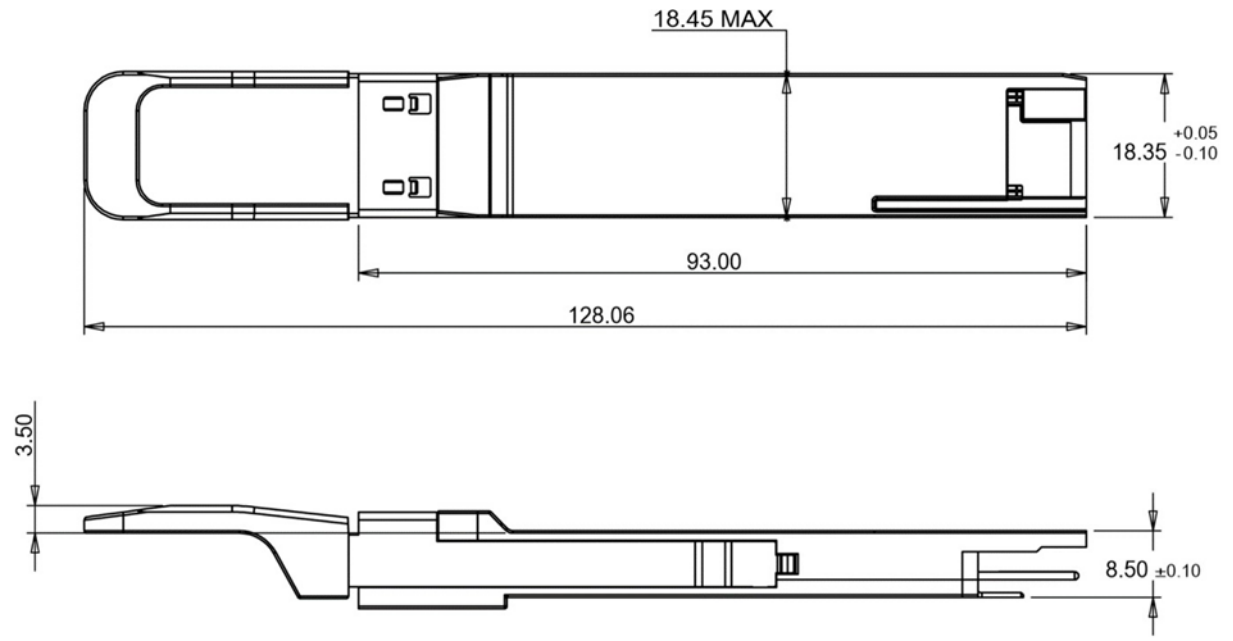

About ProLabs

Our extensive experience comes as standard. For over 20 years ProLabs has delivered optical connectivity solutions that give our customers freedom and choice through our ability to provide seamless interoperability. At the heart of our company is the ability to provide state-of-the-art optical transport and connectivity solutions that are compatible with more than 100 optical switching and transport platforms.

A Complete Portfolio of Network Solutions

ProLabs is focused on innovations in optical transport and connectivity. The combination of our knowledge of optics and networking equipment enables ProLabs to be your single source for optical transport and connectivity solutions from 100Mb to 1.6T while providing innovative solutions that increase network efficiency. We provide the optical connectivity expertise that is compatible with and enhances your switching and transport equipment.

The Trusted Partner

Customer service is our number one value. ProLabs has invested in people, labs and manufacturing capacity to ensure compatible products, and immediate answers to your questions. With Engineering and Manufacturing offices in the U.K. and U.S. augmented by field offices throughout the U.S., U.K. and Asia, ProLabs is able to be our customers best advocate 24 hours a day.

Contact Information

ProLabs US

Email: sales@prolabs.com
Telephone: 952-852-0252

ProLabs UK

Email: salessupport@prolabs.com
Telephone: +44 1285 719 600