REV.	ECN NO.	DATE	SIGN	DESCRIPTION
B	C230541	2023/04/25	Haotian	(B) X5
C	C240590	2024/05/28	Vicky	(C) X4
D	C251174	2025/09/25	Henry	(D) X1

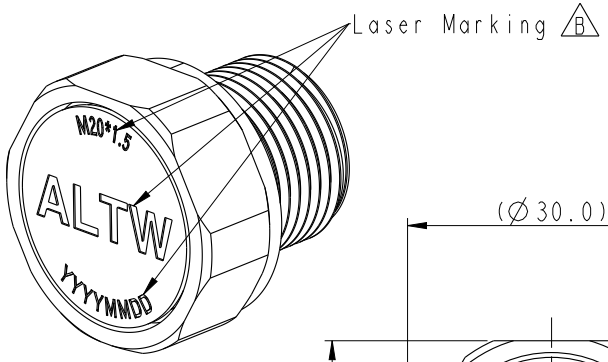

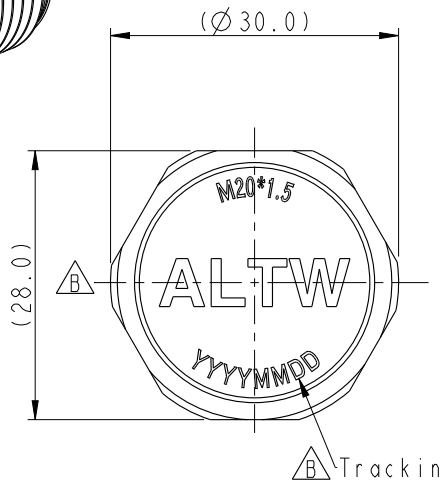

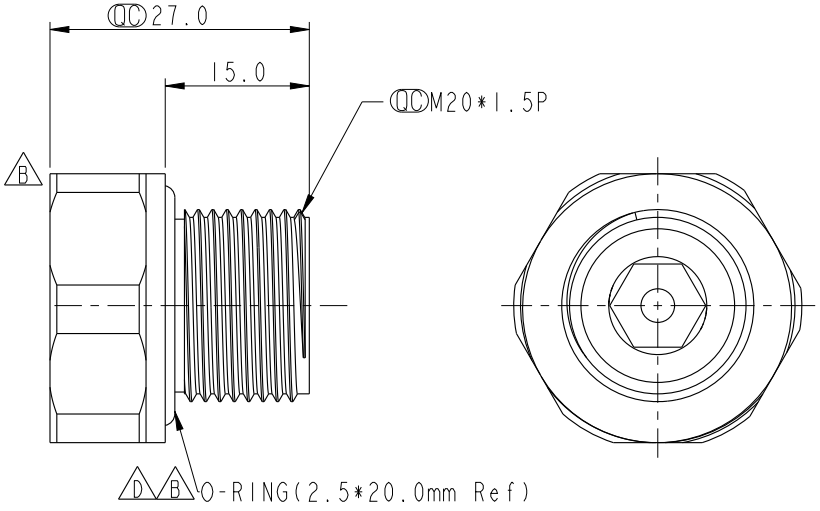

VENT-MS4NME-08002

S4: M20*1.5

ME: Metallic

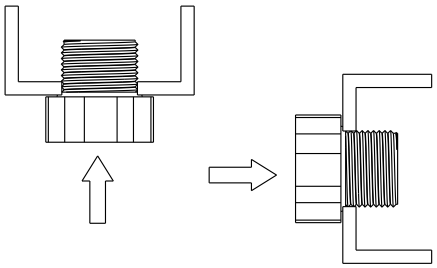

Recommended installation orientation

建議安裝朝向

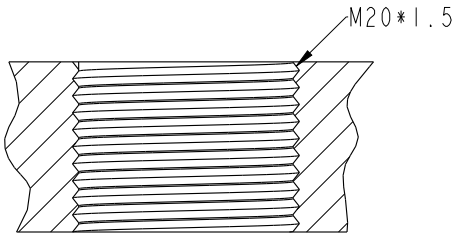

Recommended Panel Cut-Out

建議開孔尺寸

Note:

* (QC) Important Dimension.
* Waterproof Rate: IP68(2m/1h), IP69K
* Body: Aluminum Alloy, Anodizing
* Cap: Aluminum Alloy, Anodizing
* Membrane: ePTFE
* O-Ring: Silicone, UL94V-0
* (C) Air Permeability: >1400ml/min at 7 kPa
* (C) Opening Pressure: 12±2 kPa
* (C) Recommended Torque: 30.6~51 kgf.cm

UNIT: mm

TOLERANCE
.X ±0.25
.XX ±0.1
.XXX ±0.05
ANGLES ±1°

TITLE: VENT, M20, ME 1400ML/MIN, SR (C)

SCALE: 3:2 | SIZE: A4 | SHEET 1 OF 1

REV.: D | WC-REV.: .0 | (QC): Inspection item

Amphenol LTW

安費諾亮泰企業股份有限公司

ITEM NO: VENT-MS4NME-08002	DRAWN BY: Henry	DATE: 2025-09-25
DWG NO: VENT-MS4NME-08002	CHECKED BY: Xiaofeng	DATE: 2025-09-25
CUSTOMER: ALTW	APPROVED BY: Jerry	DATE: 2025-09-25

THIS DOCUMENT IS SUBJECT TO CHANGE WITHOUT NOTICE. IT IS CONFIDENTIAL AND A PROPERTY OF Amphenol LTW. DISCLOSURE TO THIRD PARTY HAS TO BE AUTHORIZED BY Amphenol LTW.