DWG NO.	SH	REV
C-NJYYE6-C199	1	1.0

TABLE 1			
AHSP P/N	LENGTH "A"	ACD P/N	DESCRIPTION
NJYYE6-C102	2000±40mm	SF-NJYYE60002-002M	ASY Q-DD/Q-DD 26AWG 2.0M
NJYYE6-C106	500±10mm [8]	SF-NJYYE60006-000.5M	ASY Q-DD/Q-DD 26AWG 0.5M

REVISIONS						
ZONE	REV.	ECN NUMBER	DESCRIPTION	BY	DATE	APPROVED
	1.0	RGAO-23102610	INITIAL RELEASE	QJ.DAI	10/23/2023	C.DENG

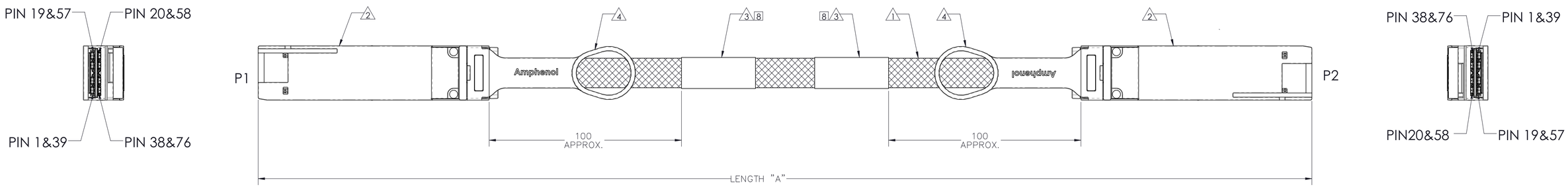

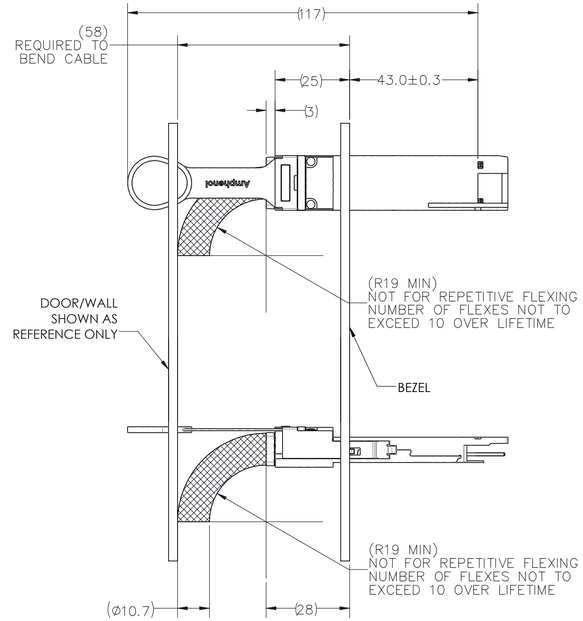

RADIUS FROM END OF DIECAST

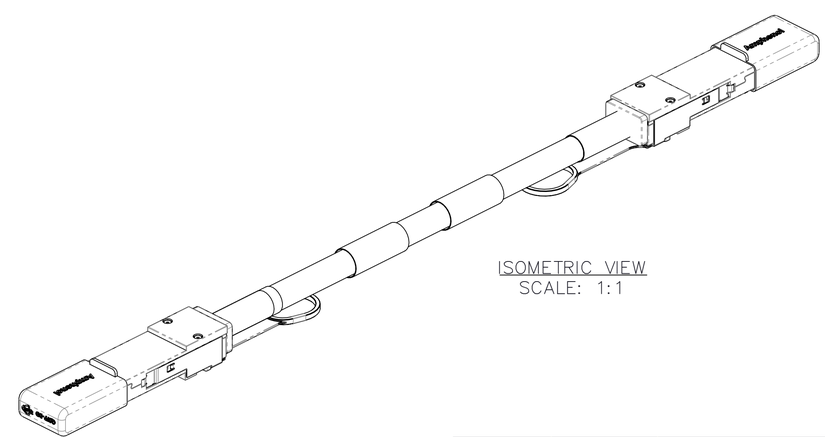

ISOMETRIC VIEW
SCALE: 1:1

TABLE 2	
ITEM No.	DESCRIPTION
1	26 AWG, 16-PR (ø10.7), VW1 PROTECTIVE PLASTIC NET COVERING WV-1 BLACK
2	PLUG, QSFP-DD, REFERENCE "QSFP-DD MSA"
3	LABEL, WRAPPED - AHSP P/N, REV, DATE CODE, LENGTH, CoO, SERIAL NUMBER & WEEE LOGO AND CE LOGO
4	PULL TAB, BLUE 2718
5	EPROM - REFERENCE QSFP-DD MSA, PAGE A0 ONLY

NOTES:

1. THIS DRAWING IS RESERVED FOR AMPHENOL CABLE ON DEMAND.
2. ASSEMBLIES SHALL BE COMPLIANT TO QSFP-DD MSA SPECIFICATION.
3. CABLE ASSEMBLIES, COMPONENTS AND SUB-COMPONENTS SHALL BE COMPLIANT TO EU DIRECTIVE 2011/65/EU-RoHS2.
4. CABLE ASSEMBLIES MUST MEET SHIELDING EFFECTIVENESS REQUIREMENTS OF 35DB MINIMUM FROM 1-10GHZ AND 30DB FROM 10-18 GHZ.
5. PACKAGE COMPLETED ASSY IN AN APPROPRIATELY SIZED ESD BAG.
6. UL LABEL MUST BE ON SHIPPING CARTON PER SUBJECT 764 OF THE UL COMPONENT WIRING HARNESS (ZPFW2) FILE #E86140. CSA LABEL MUST BE ON SHIPPING CARTON.

[7] LENGTHS ABOVE 2.0 METERS WOULD EXCEED IEEE802.3ck INSERTION LOSS LIMIT.

[8] LENGTHS LESS THAN 1.0 METERS ONLY REQUIRE ONE LABEL PLACED ON P1 END.

Amphenol RoHS 2011/65/EU

TOLERANCES	
0.0	± 0.25
0.00	± 0.08
0.000	± —
ANGLES	± 1.0°

UNLESS OTHERWISE SPECIFIED DIMENSIONS ARE IN MM

DWN	10/23/2023	QJ.DAI
CHK	10/23/2023	C.DENG
APVD	10/23/2023	W.ZHANG

Amphenol AHSP

A Division of Amphenol Corporation
200 Innovative Way, Suite 201, Nashua, N.H. 03062 (603) 879-3000

TITLE: CABLE ASSY, QSFP-DD 112G PASSIVE 100Ω, 26AWG, DUAL DRAIN

INTERPRET PER ASME Y14.5

CODE IDENT 31413

CUSTOMER USE DRAWING

PART NO.	REV
SEE TABLE 1	N/A
DRAWING NO. C-NJYYE6-C199	REV 1.0

SIZE D | SCALE 2:1 | SHEET 1 OF 2

DWG NO. C-NJYYE6-C199 | SH 1 | REV 1.0

DWG NO.	SH	REV
C-NJYYE6-C199	2	1.0

REVISIONS

ZONE	REV.	ECN NUMBER	DESCRIPTION	BY	DATE	APPROVED
			SEE SHEET 1			

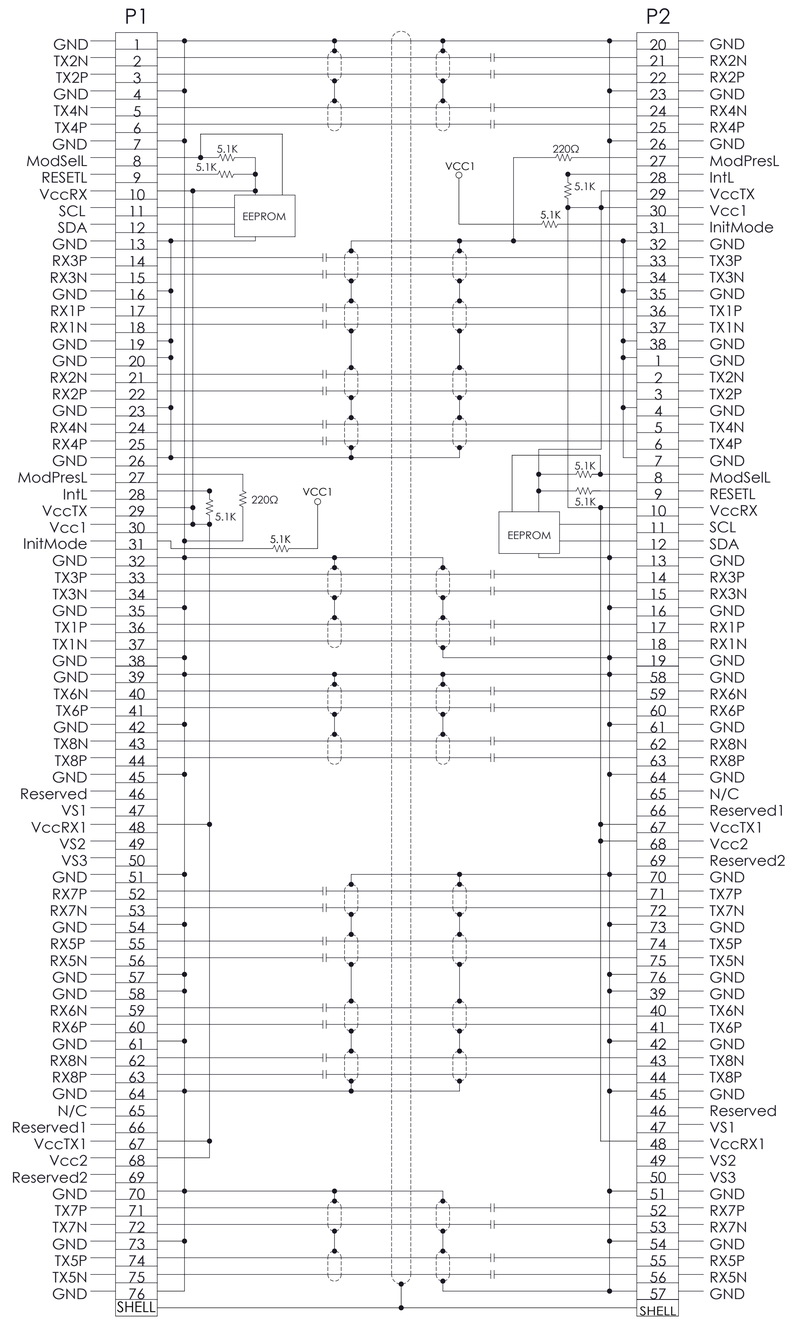

NOTE: DC BLOCKING CAP VALUE IS 100nF

TOLERANCES		DWN 10/23/2023 QJ.DAI
0.0	± 0.25	CHK 10/23/2023 C.DENG
0.00	± 0.08	APVD 10/23/2023 W.ZHANG
0.000	± —	
ANGLES	± 1.0°	

UNLESS OTHERWISE SPECIFIED DIMENSIONS ARE IN MM

Amphenol AHSP

A Division of Amphenol Corporation
200 Innovative Way, Suite 201, Nashua, N.H. 03062 (603) 879-3000

TITLE
CABLE ASSY, QSFP-DD 112G
PASSIVE 100Ω, 26AWG, DUAL DRAIN

INTERPRET PER ASME Y14.5

CUSTOMER USE DRAWING

CODE IDENT 31413

PART NO.	REV
SEE TABLE 1	N/A
DRAWING NO. C-NJYYE6-C199	REV 1.0

SIZE D | SCALE 1:1 | SHEET 2 OF 2

DWG NO. C-NJYYE6-C199 SH 2 REV 1.0