DWG NO.	SH	REV
C-NDYYYR-C199	1	A

REVISIONS						
ZONE	REV.	ECN	DESCRIPTION	BY	DATE	APPROVED
	A	RGAO-23112803	NEW RELEASE	R.GAO	11/29/2023	M.HUSSAIN

TABLE 1

AHSP P/N	LENGTH "A"	ACD P/N	DESCRIPTION
NDYYYR-C101	1000±20mm	SF-NDYYYR0001-001M	QSFP-DD 32AWG PASSIVE, 1M
NDYYYR-C102	2000±40mm 7	SF-NDYYYR0002-002M	QSFP-DD 32AWG PASSIVE, 2M
NDYYYR-C104	1500±30mm 7	SF-NDYYYR0004-001.5M	QSFP-DD 32AWG PASSIVE, 1.5M
NDYYYR-C106	500±20mm	SF-NDYYYR0006-000.5M	QSFP-DD 32AWG PASSIVE, 0.5M
NDYYYR-C103	3000±60mm 7	SF-NDYYYR0003-003M	QSFP-DD 32AWG PASSIVE, 3M
NDYYYR-C105	2500±60mm 7	SF-NDYYYR0005-002.5M	QSFP-DD 32AWG PASSIVE, 2.5M
NDYYYR-C115	600±15mm	SF-NDYYYR0015-000.6M	QSFP-DD 32AWG PASSIVE, 0.6M
NDYYYR-C116	750±15mm	SF-NDYYYR0016-000.75M	QSFP-DD 32AWG PASSIVE, 0.75M
NDYYYR-C117	900±15mm	SF-NDYYYR0017-000.9M	QSFP-DD 32AWG PASSIVE, 0.9M
NDYYYR-C118	1100±20mm	SF-NDYYYR0018-001.1M	QSFP-DD 32AWG PASSIVE, 1.1M

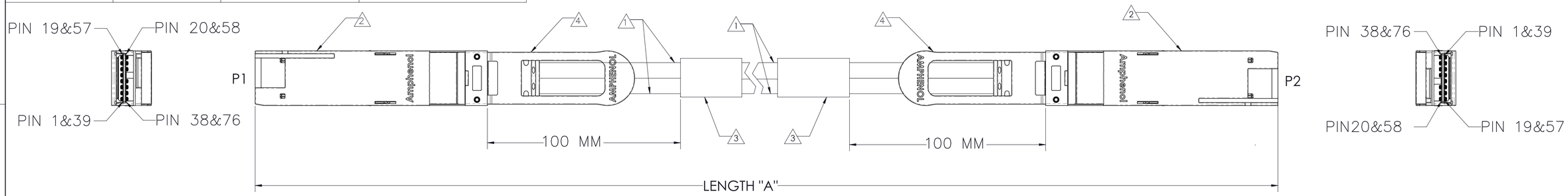

TABLE 2

ITEM No.	DESCRIPTION
1	32 AWG, 8-PR (ø5.20), SPLITTER, PVC JKT, VW1
2	PLUG, QSFP-DD, REFERENCE "QSFP-DD MSA"
3	LABEL, WRAPPED-AHSP P/N, REV, DATE CODE, LENGTH, CoO, SERIAL NUMBER & WEEE LOGO AND CE LOGO
4	PULL TAB, BLUE 2718
5	EPROM - REFERENCE CMIS, PAGE A0 ONLY

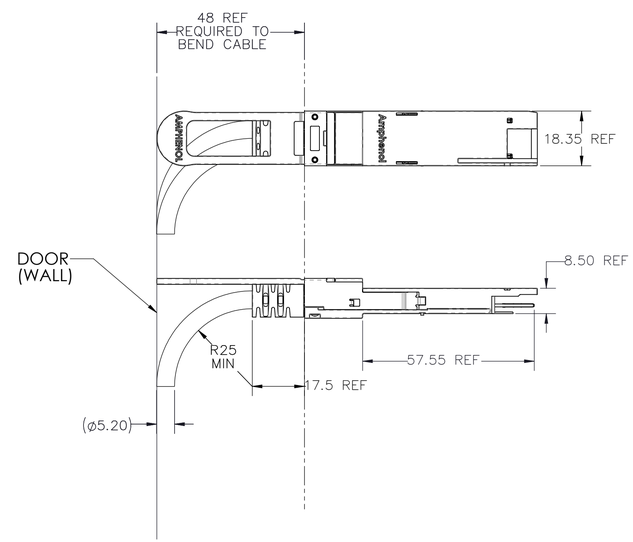

RADIUS FROM END OF DIECAST

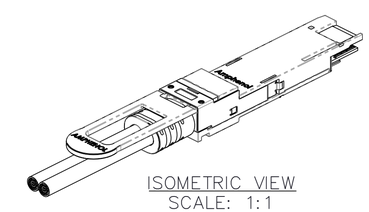

ISOMETRIC VIEW
SCALE: 1:1

NOTES:

1. THIS DRAWING IS RESERVED FOR AMPHENOL CABLES ON DEMAND.
2. ASSEMBLIES SHALL BE COMPLIANT TO QSFP-DD MSA SPECIFICATION.
3. CABLE ASSEMBLIES, COMPONENTS AND SUB-COMPONENTS SHALL BE COMPLIANT TO EU DIRECTIVE 2011/65/EU-RoHS2.
4. CABLE ASSEMBLIES MUST MEET SHIELDING EFFECTIVENESS REQUIREMENTS OF 35DB MINIMUM FROM 1-10GHZ AND 30DB FROM 10-18 GHZ.
5. PACKAGE COMPLETED ASSY IN AN APPROPRIATELY SIZED ESD BAG.
6. UL LABEL MUST BE ON SHIPPING CARTON PER SUBJECT 764 OF THE UL COMPONENT WIRING HARNESS (ZPFW2) FILE #E86140. CSA LABEL MUST BE ON SHIPPING CARTON.

7 LENGTHS ABOVE 1.5M DOES NOT SUPPORT IEEE802.3cd.

TOLERANCES	
0.0	± 0.25
0.00	± 0.08
0.000	± –
ANGLES	± 1.0°

UNLESS OTHERWISE SPECIFIED DIMENSIONS ARE IN MM

DWN	11/29/2023	R.GAO
CHK	11/29/2023	W.ZHANG
APVD	11/29/2023	M.HUSSAIN

Amphenol AHSP

A Division of Amphenol Corporation
200 Innovative Way, Suite 201, Nashua, N.H. 03062 (603) 879-3000

TITLE: CABLE ASSY, QSFP-DD, PASSIVE 100Ω, DUAL-ENTRY 32 AWG

INTERPRET PER ASME Y14.5

CODE IDENT 31413

CUSTOMER USE DRAWING

PART NO.	REV
SEE TABLE 1	N/A
DRAWING NO. C-NDYYYR-C199	REV A

SIZE D | SCALE 2:1 | SHEET 1 OF 2

DWG NO. C-NDYYYR-C199 | SH 1 | REV A

AHSP_szD_mm.drwdot Rev01/201409

DWG NO.	SH	REV
C-NDYYYR-C199	2	A

REVISIONS

ZONE	REV.	ECN	DESCRIPTION	BY	DATE	APPROVED
			SEE SHEET 1			

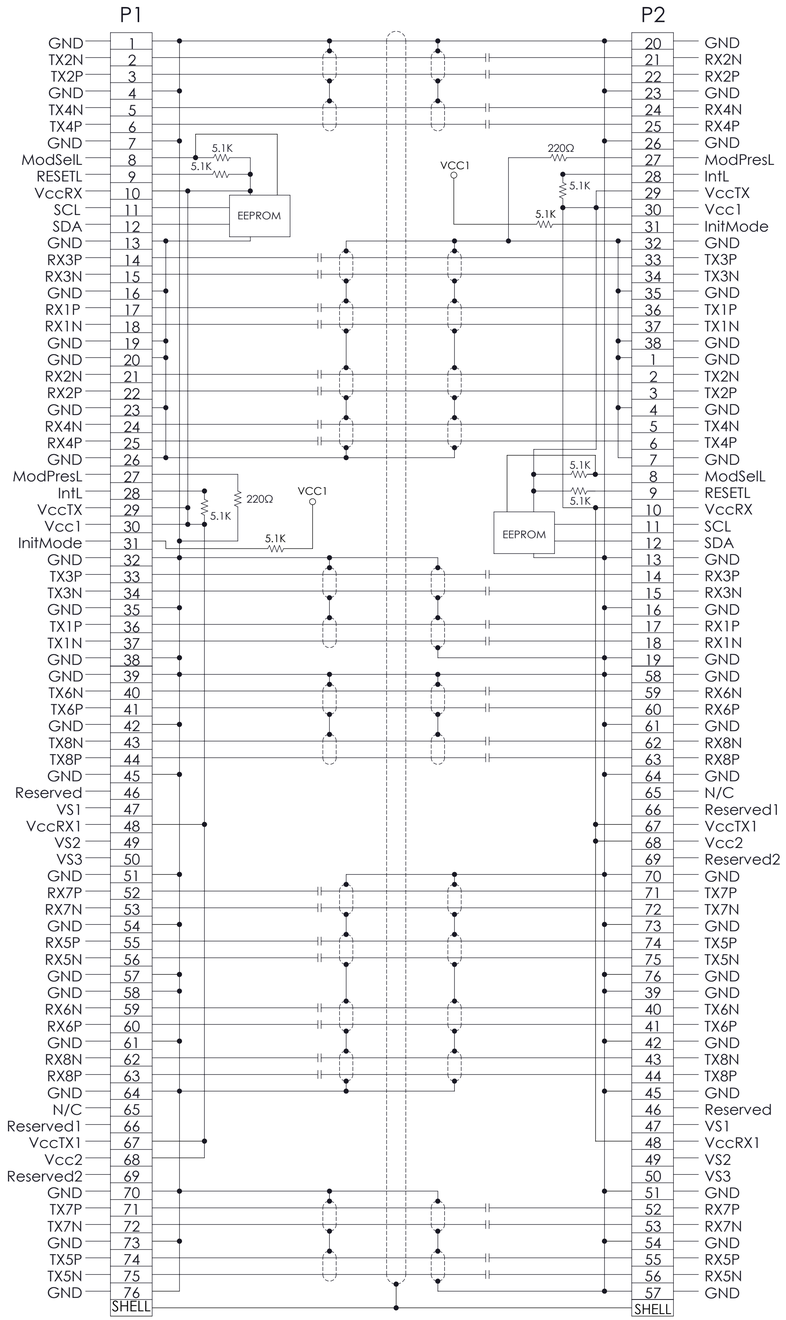

NOTE: DC BLOCKING CAP VALUE IS 100nF

TOLERANCES	
0.0	± 0.25
0.00	± 0.08
0.000	± —
ANGLES	± 1.0°

UNLESS OTHERWISE SPECIFIED DIMENSIONS ARE IN MM

DWN	11/29/2023	R.GAO
CHK	11/29/2023	W.ZHANG
APVD	11/29/2023	M.HUSSAIN

Amphenol AHSP

A Division of Amphenol Corporation
200 Innovative Way, Suite 201, Nashua, N.H. 03062 (603) 879-3000

TITLE: CABLE ASSY, QSFP-DD, PASSIVE 100Ω, DUAL-ENTRY 32 AWG

INTERPRET PER ASME Y14.5

CUSTOMER USE DRAWING

CODE IDENT 31413

PART NO.	REV
SEE TABLE 1	N/A
DRAWING NO. C-NDYYYR-C199	REV A

SIZE D | SCALE 1:1 | SHEET 2 OF 2

DWG NO C-NDYYYR-C199 | SH 2 | REV A