REV.	ECN NO.	DATE	SIGN	DESCRIPTION
A		2025/09/29	Peng_Fei	REV.01 To REV.A

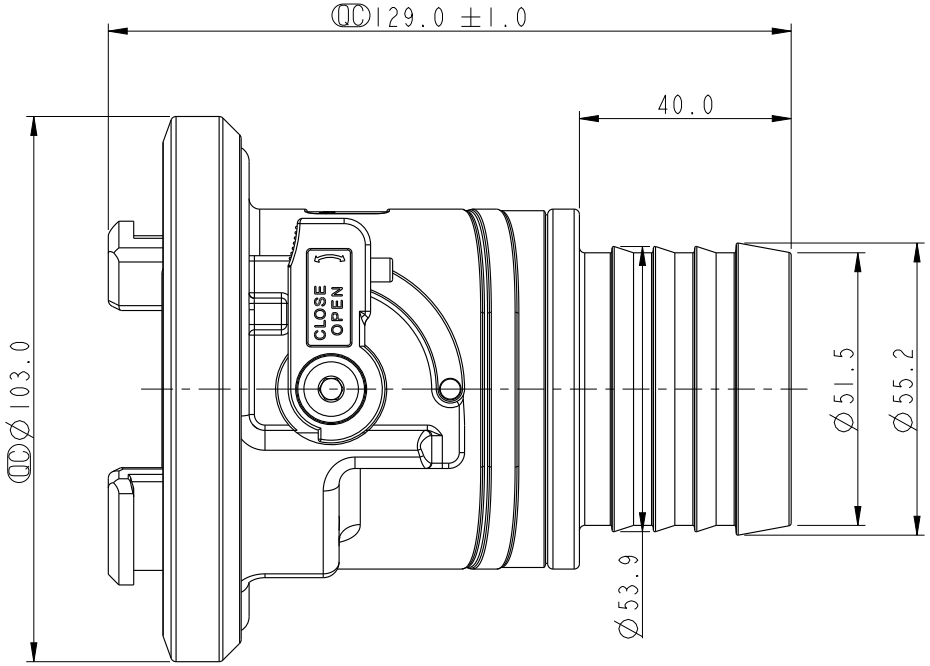

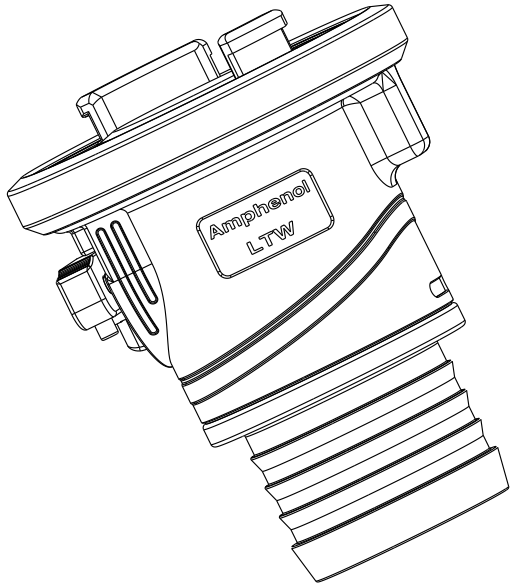

Note
* RoHS Compliant
* QC Important Dimension
* Nominal Diameter:DN40
* Seal Material: EPDM
* Body: SUS304
* Weight:Ref.1858G / PCS

UNIT:mm	TITLE: DN40 Hose Barb Type	Amphenol LTW 安費諾亮泰企業股份有限公司	ITEM NO: SBV40-SEPPC-NA001	DRAWN BY: Peng_Fei	DATE: 2025/09/29
TOLERANCE: ±0.5	SCALE: 33:100 / SIZE: A4 / SHEET: 1 OF 1		DWG NO: SBV40-SEPPC-NA001	CHECKED BY: Vic	DATE: 2025/09/29
	REV.: A / WC-REV. / QC: Inspection item		CUSTOMER: ALTW	APPROVED BY: Jerry	DATE: 2025/09/29

THIS DOCUMENT IS SUBJECT TO CHANGE WITHOUT NOTICE. IT IS CONFIDENTIAL AND A PROPERTY OF Amphenol LTW. DISCLOSURE TO THIRD PARTY HAS TO BE AUTHORIZED BY Amphenol LTW.