**QSFP-40SR4-C**

Amer Networks® QSFP-40SR4 Compatible TAA 40GBase-SR4 QSFP+ Transceiver (MMF, 850nm, 400m, MPO, DOM)

**Features:**

- SFF-8436 Compliance
- MPO Connector
- Multi-mode Fiber
- Commercial Temperature 0 to 70 Celsius
- Hot Pluggable
- Metal with Lower EMI
- Excellent ESD Protection
- RoHS Compliant and Lead Free

**Applications:**

- 40GBase Ethernet
- Access and Enterprise

**Product Description**

This Amer Networks® QSFP-40SR4 compatible QSFP+ transceiver provides 40GBase-SR4 throughput up to 400m over multi-mode fiber (MMF) using a wavelength of 850nm via an MPO connector. It is guaranteed to be 100% compatible with the equivalent Amer Networks® transceiver. This easy to install, hot swappable transceiver has been programmed, uniquely serialized and data-traffic and application tested to ensure that it will initialize and perform identically. Digital optical monitoring (DOM) support is also present to allow access to real-time operating parameters. This transceiver is Trade Agreements Act (TAA) compliant. We stand behind the quality of our products and proudly offer a limited lifetime warranty.

ProLabs' transceivers are RoHS compliant and lead-free.

TAA refers to the Trade Agreements Act (19 U.S.C. & 2501-2581), which is intended to foster fair and open international trade. TAA requires that the U.S. Government may acquire only "U.S.-made or designated country end products.")

**Rev. 012026**

## Absolute Maximum Ratings

| Parameter | Symbol | Min. | Typ. | Max. | Unit |
|---|---|---|---|---|---|
| **Maximum Supply Voltage** | Vcc | -0.5 | | 4.0 | V |
| **Storage Temperature** | Ts | -40 | | 85 | °C |
| **Case Operating Temperature** | Tc | 0 | 25 | 70 | °C |
| **Humidity (non-condensing)** | RH | 5 | | 95 | % |
| **Data Rate per Channel** | | | 10.3125 | | Gbps |

## Electrical Characteristics (TOP=25°C, Vcc=3.3Volts)

| Parameter | Symbol | Min. | Typ. | Max. | Unit | Notes |
|---|---|---|---|---|---|---|
| **Power Supply Voltage** | Vcc | 3.135 | 3.30 | 3.465 | V | |
| **Power Supply Current** | Icc | | | 430 | mA | |
| **Power Consumption** | $P_{DISS}$ | | | 1.5 | W | |
| **Transmitter** | | | | | | |
| **Differential data input swing** | Vin,pp | 180 | | 900 | mV | |
| **Input differential impedance** | Zin | | 100 | | Ω | |
| **Receiver** | | | | | | |
| **Differential data output swing** | Vout, pp | 300 | | 850 | mV | |
| **Output differential impedance** | Zin | | 100 | | Ω | |

## Optical Characteristics

| Parameter | Symbol | Min. | Typ. | Max. | Unit | Notes |
|---|---|---|---|---|---|---|
| **Transmitter** | | | | | | |
| **Optical Power (average)** | $P_{AVE}$ | -7.6 | | +2.4 | dBm | 1 |
| **Optical Wavelength** | Tλ | 830 | 850 | 860 | nm | |
| **Optical Extinction Ratio** | ER | 3 | | | dB | 2 |
| **Spectral Width (RMS)** | Δλ | | | 0.4 | nm | |
| **Optical Return Loss Tolerance** | ORLT | | | 12 | dB | |
| **Transmitter and Dispersion Penalty** | TDP | | | 3.2 | dB | |
| **Receiver** | | | | | | |
| **Receiver Sensitivity (average)** | $R_{AVE}$ | | | -9.5 | dBm | 3 |
| **Damage Threshold** | Pol | 2.5 | | | dBm | 3 |
| **Receiver wavelength** | Rλ | 830 | 850 | 860 | nm | |

**Notes:**

1. The optical power is launched into OM3 MMF.
2. Measured with a PRBS $2^{31}$-1 test pattern @10.3125Gbps.
3. Measured with PRBS $2^{31}$-1 test pattern, 10.3125Gb/s, BER<$10^{-12}$.

**Pin Descriptions**

| Pin | Logic | Symbol | Name/Descriptions | Ref. |
|---|---|---|---|---|
| **1** | | GND | Module Ground | 1 |
| **2** | CML-I | Tx2- | Transmitter inverted data input | |
| **3** | CML-I | Tx2+ | Transmitter non-inverted data input | |
| **4** | | GND | Module Ground | 1 |
| **5** | CML-I | Tx4- | Transmitter inverted data input | |
| **6** | CML-I | Tx4+ | Transmitter non-inverted data input | |
| **7** | | GND | Module Ground | 1 |
| **8** | LVTTL-I | MODSEIL | Module Select | 2 |
| **9** | LVTTL-I | ResetL | Module Reset | 2 |
| **10** | | VCCRx | +3.3v Receiver Power Supply | |
| **11** | LVCMOS-I | SCL | 2-wire Serial interface clock | 2 |
| **12** | LVCMOS-I/O | SDA | 2-wire Serial interface data | 2 |
| **13** | | GND | Module Ground | 1 |
| **14** | CML-O | RX3+ | Receiver non-inverted data output | |
| **15** | CML-O | RX3- | Receiver inverted dta output | |
| **16** | | GND | Module Ground | 1 |
| **17** | CML-O | RX1+ | Receiver non-inverted data output | |
| **18** | CML-O | RX1- | Receiver inverted data output | |
| **19** | | GND | Module Ground | 1 |
| **20** | | GND | Module Ground | 1 |
| **21** | CML-O | RX2- | Receiver inverted data output | |
| **22** | CML-O | RX2+ | Receiver non-inverted data output | |
| **23** | | GND | Module Ground | 1 |
| **24** | CML-O | RX4- | Receiver inverted data output | |
| **25** | CML-O | RX4+ | Receiver non-inverted data output | |
| **26** | | GND | Module Ground | 1 |
| **27** | LVTTL-O | ModPrsL | Module Present, internal pulled down to GND | |
| **28** | LVTTL-O | IntL | Interrupt output, should be pulled up on host board | 2 |
| **29** | | VCCTx | +3.3v Transmitter Power Supply | |
| **30** | | VCC1 | +3.3v Power Supply | |
| **31** | LVTTL-I | LPMode | Low Power Mode | 2 |
| **32** | | GND | Module Ground | 1 |
| **33** | CML-I | Tx3+ | Transmitter non-inverted data input | |

| | | | | |
|---|---|---|---|---|
| **34** | CML-I | Tx3- | Transmitter inverted data input | |
| **35** | | GND | Module Ground | 1 |
| **36** | CML-I | Tx1+ | Transmitter non-inverted data input | |
| **37** | CML-I | Tx1- | Transmitter inverted data input | |
| **38** | | GND | Module Ground | 1 |

**Notes:**

1. Module circuit ground is isolated from module chassis ground with in the module.
2. Open collector; should be pulled up with 4.7k-10k ohms on host board to a voltage between 3.15V and 3.6V.

**Electrical Pin-out Details**

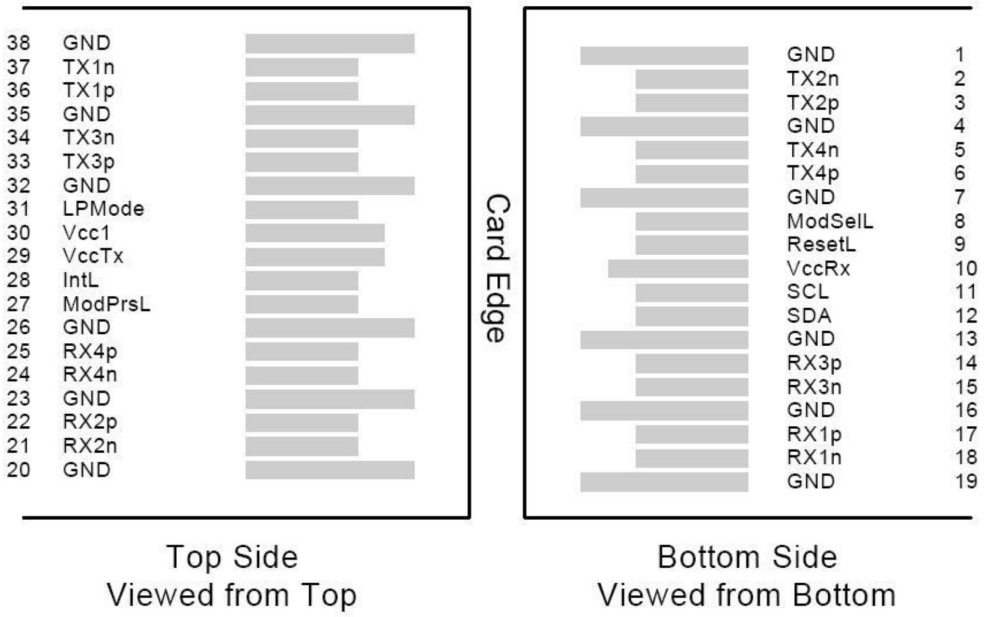

## Recommended Host Board Power Supply Filter Network

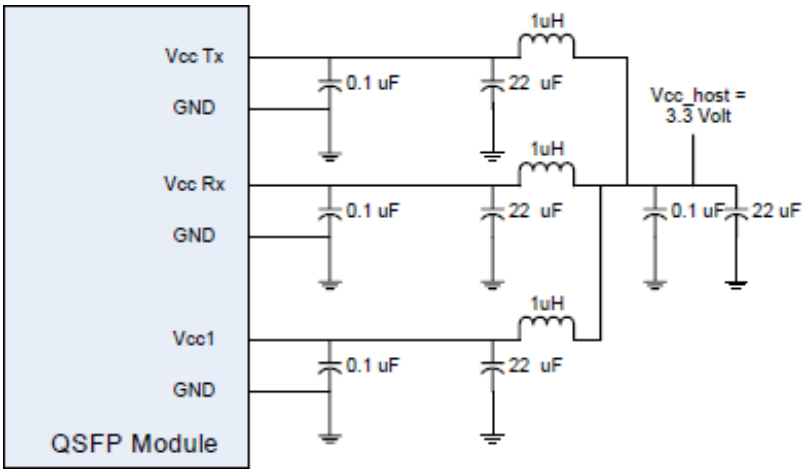


## Recommended Application Interface Block Diagram

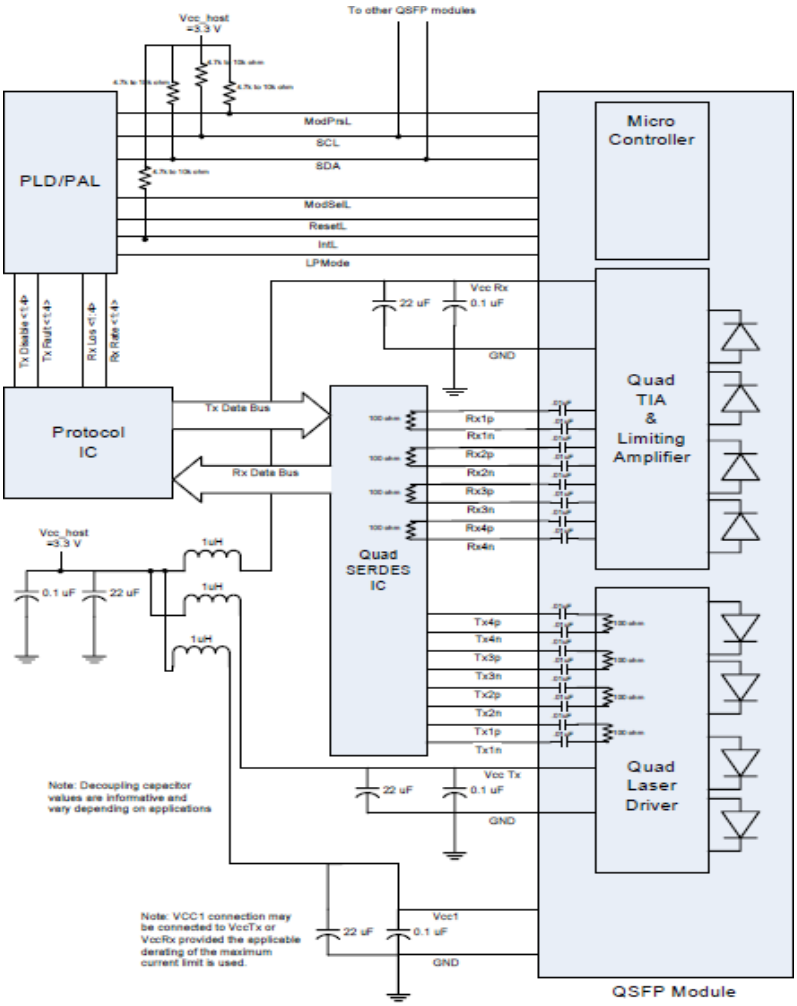

**Mechanical Specifications**

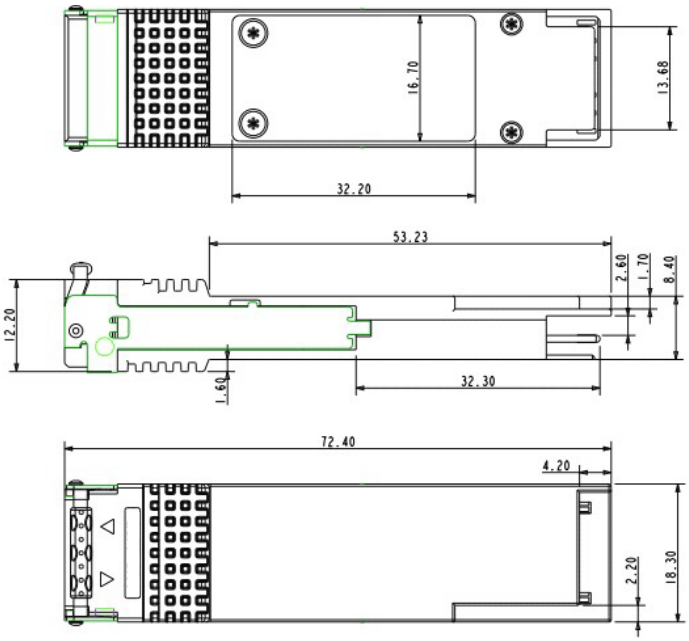


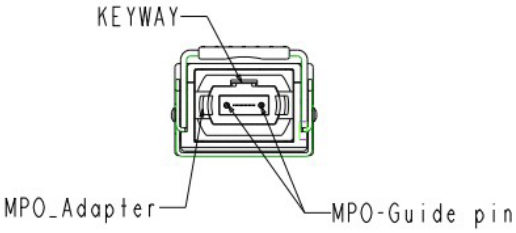

**About ProLabs**

Our extensive experience comes as standard. For over 20 years ProLabs has delivered optical connectivity solutions that give our customers freedom and choice through our ability to provide seamless interoperability. At the heart of our company is the ability to provide state-of-the-art optical transport and connectivity solutions that are compatible with more than 100 optical switching and transport platforms.

**A Complete Portfolio of Network Solutions**

ProLabs is focused on innovations in optical transport and connectivity. The combination of our knowledge of optics and networking equipment enables ProLabs to be your single source for optical transport and connectivity solutions from 100Mb to 1.6T while providing innovative solutions that increase network efficiency. We provide the optical connectivity expertise that is compatible with and enhances your switching and transport equipment.

**The Trusted Partner**

Customer service is our number one value. ProLabs has invested in people, labs and manufacturing capacity to ensure compatible products, and immediate answers to your questions. With Engineering and Manufacturing offices in the U.K. and U.S. augmented by field offices throughout the U.S., U.K. and Asia, ProLabs is able to be our customers best advocate 24 hours a day.

**Contact Information**

ProLabs US

Email: sales@prolabs.com
Telephone: 952-852-0252

ProLabs UK

Email: salessupport@prolabs.com
Telephone: +44 1285 719 600