QSFP-100GBASE-SR-BD-C-C

Cisco® Compatible TAA 100GBase-BX SR1.2 QSFP28 Transceiver (MMF, 844nm to 918nm, 100m, LC, DOM)

Features:

- QSFP28 MSA compliant
- Supports 100GE aggregate bit rates
- Supports KP4 FEC @ 100G data rate
- Two independent full-duplex channels
- Up to 100m OM4 MMF transmission
- Operating case temperature: 10 to 70 C @ 100G
- Single 3.3V power supply
- Maximum power consumption 4W
- LC optical connector
- RoHS compliant and lead-free

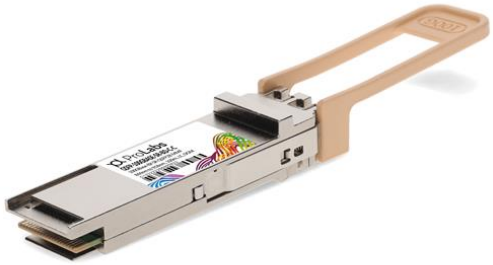

Applications:

- 100GBase Ethernet
- Access and Enterprise

Product Description

This Cisco® compatible QSFP28 transceiver provides 100GBase-BX SR1.2 throughput up to 100m over OM4 multi-mode fiber (MMF) using a wavelength of 844nm to 918nm via an LC connector. This bidirectional unit must be used with another transceiver or network appliance of complementing wavelengths. It can operate at temperatures between 0 and 70C. Our transceiver is built to meet or exceed OEM specifications and is guaranteed to be 100% compatible with Cisco®. It has been programmed, uniquely serialized, and tested for data-traffic and application to ensure that it will initialize and perform identically. All of our transceivers comply with Multi-Source Agreement (MSA) standards to provide seamless network integration. Additional product features include Digital Optical Monitoring (DOM) support which allows access to real-time operating parameters. We stand behind the quality of our products and proudly offer a limited lifetime warranty.

ProLabs' transceivers are RoHS compliant and lead-free.

TAA refers to the Trade Agreements Act (19 U.S.C. & 2501-2581), which is intended to foster fair and open international trade. TAA requires that the U.S. Government may acquire only "U.S.-made or designated country end products.")

Rev. 012026

Absolute Maximum Ratings

Parameter		Symbol	Min.	Max.	Unit	Notes
Maximum Supply Voltage		Vcc	-0.5	3.6	V	
Storage Temperature		T_S	-40	85	°C	
Operating Case Temperature		T_{OP}	10	70	°C	
Operating Relative Humidity		RH	0	85	%	
Damage Threshold		TH_d	5		dBm	
Data Rate Accuracy			-100	100	ppm	
Pre-FEC Bit Error Ratio					2.4×10^{-4}	
Post-FEC Bit Error Ratio					1×10^{-12}	1
Link Distance	**OM3**	D1		70	m	2
	OM4	D2		100	m	2
	OM5	D3		150	m	2

Notes:

1. FEC provided by host system.
2. FEC required on host system to support maximum distance.

Electrical Characteristics

Parameter	Test Point	Min.	Typ.	Max.	Unit	Notes
Power Supply Voltage	Vcc	3.135	3.3	3.465	V	
Control Input Voltage High		2		Vcc	V	
Control Input Voltage Low		0		0.8	V	
Power Consumption				4	W	
Supply Current	Icc			1.21	A	
Transmitter						
Overload Differential Voltage pk-pk	TP1a	900			mV	
Common Mode Voltage (Vcm)	TP1	-350		2850	mV	1
Differential Termination Resistance Mismatch	TP1			10	%	At 1MHz
Differential Return Loss (SDD11)	TP1			See CEI-28G-VSR Equation 13-19	dB	
Common Mode to Differential conversion and Differential to Common Mode conversion (SDC11, SCD11)	TP1			See CEI-28G-VSR Equation 13-20	dB	
Stresses Input Test	TP1a	See CEI-28G-VSR Section 13.3.11.2.1				
Receiver						
Differential Voltage, pk-pk	TP4			900	mV	
Common Mode Voltage (Vcm)	TP4	-350		2850	mV	1
Common Mode Noise, RMS	TP4			17.5	mV	
Differential Termination Resistance Mismatch	TP4			10	%	At 1MHZ
Differential Return Loss (SDD22)	TP4			See CEI-28G-VSR Equation 13-19	dB	
Common Mode to Differential conversion and Differential to Common Mode conversion (SDC22, SCD22)	TP4			See CEI-28G-VSR Equation 13-21	dB	
Common Mode Return Loss (SCC22)	TP4			-2	dB	2
Transition Time, 20 to 80%	TP4	9.5			ps	
Vertical Eye Closure (VEC)	TP4			5.5	dB	
Eye Width at 10^{-15} probability (EW15)	TP4	0.57			UI	
Eye Height at 10^{-15} probability (EH15)	TP4	228			mV	

Notes:

1. Vcm is generated by the host. Specification includes effects of ground offset voltage.
2. From 250MHz to 30GHz

Optical Characteristics

Parameter	Symbol	KP4 FEC Mode			Unit	Notes
		Min.	Typ.	Max.		
Transmitter						
Center Wavelength Line0	λC	844		863	nm	
Center Wavelength Line1	λC	900		918	nm	
RMS Spectral Width	Δλrms			λ1: 0.6 λ2: 0.65	nm	
Average Launch Power, each Lane	P_{AVG}	-6.2		4	dBm	1
Optical Modulation Amplitude (OMA), each Lane	P_{OMA}	-4.2		3	dBm	
Launch power in OMA minus TDP, each lane		-5.6			dBm	
TDECQ, each lane				4.5	dBm	
Extinction Ratio	ER	3.0			dB	
Transmitter transition time, each lane (max)				31	ps	
RIN12 OMA				-128	dB/Hz	
Optical Return Loss Tolerance	TOL			12	dB	
Average Launch Power OFF Transmitter, each Lane	Poff			-30	dBm	
Encircled Flux		≥ 86% at 19 µm ≤ 30% at 4.5 µm				2
Signaling rate, each lane		26.5625± 100ppm			Gbps	
Receiver						
Center Wavelength Lane0	λ_C	844	850	863	nm	
Center Wavelength Lane1	λ_C	900	910	918	nm	
Damage Threshold, each Lane	TH_d	5			dBm	3
Average Receive Power, each lane		-8.2			dBm	4
Average power at receiver input, each lane (overload)				4	dBm	
Receiver Reflectance	R_R			-12	dB	
Stressed receiver sensitivity in OMA, Lane2				-3.5	dBm	5
Receiver sensitivity (OMA outer), each lane				Max(-6.6, SECQ-8) as per IEEE cl 150	dBm	
LOS Assert	LOSA	-30		-14.2	dBm	
LOS Deassert	LOSD			-11.2	dBm	
LOS Hysteresis	LOSH	0.5			dB	

Notes:

1. Even if the mTDEC <0.9 db, the OMA (min) must exceed this value.
2. If measured into type A1a.2 50um fiber in accordance with IEC 61280-1-4.
3. The receiver shall be able to tolerate, without damage, continuous exposure to a modulated optical input signal having this power level on one lane. The receiver does not have to operate correctly at this input power.

4. Average receive power, each lane (min) is informative and not the principal indicator of signal strength. A received power below this value cannot be compliant; however, a value above this does not ensure compliance.
5. Measured with conformance test signal at TP3 as per the following:

Stressed eye closure (SECq), each lane	4.5	dB
OMA of each aggressor, each lane	3	dBm

Pin Descriptions

Pin	Logic	Symbol	Name/Descriptions	Notes
1		GND	Ground	1
2	CML-I	Tx2n	Transmitter Inverted Data Input	
3	CML-I	Tx2p	Transmitter Non-Inverted Data output	
4		GND	Ground	1
5	CML-I	Tx4n	Transmitter Inverted Data Input	
6	CML-I	Tx4p	Transmitter Non-Inverted Data output	
7		GND	Ground	1
8	LVTLL-I	ModSelL	Module Select	
9	LVTLL-I	ResetL	Module Reset	
10		VccRx	+3.3V Power Supply Receiver	2
11	LVCMOS-I/O	SCL	2-Wire Serial Interface Clock	
12	LVCMOS-I/O	SDA	2-Wire Serial Interface Data	
13		GND	Ground	
14	CML-O	Rx3p	Receiver Non-Inverted Data Output	
15	CML-O	Rx3n	Receiver Inverted Data Output	
16		GND	Ground	1
17	CML-O	Rx1p	Receiver Non-Inverted Data Output	
18	CML-O	Rx1n	Receiver Inverted Data Output	
19		GND	Ground	1
20		GND	Ground	1
21	CML-O	Rx2n	Receiver Inverted Data Output	
22	CML-O	Rx2p	Receiver Non-Inverted Data Output	
23		GND	Ground	1
24	CML-O	Rx4n	Receiver Inverted Data Output	1
25	CML-O	Rx4p	Receiver Non-Inverted Data Output	
26		GND	Ground	1
27	LVTTL-O	ModPrsL	Module Present	
28	LVTTL-O	IntL	Interrupt	

29		VccTx	+3.3 V Power Supply transmitter	2
30		Vcc1	+3.3 V Power Supply	2
31	LVTTL-I	LPMode	Low Power Mode	
32		GND	Ground	1
33	CML-I	Tx3p	Transmitter Non-Inverted Data Input	
34	CML-I	Tx3n	Transmitter Inverted Data Output	
35		GND	Ground	1
36	CML-I	Tx1p	Transmitter Non-Inverted Data Input	
37	CML-I	Tx1n	Transmitter Inverted Data Output	
38		GND	Ground	1

Notes:

1. GND is the symbol for signal and supply (power) common for the QSFP28 module. All are common within the QSFP28 module and all module voltages are referenced to this potential unless otherwise noted. Connect these directly to the host board signal-common ground plane.
2. VccRx, Vcc1 and VccTx are the receiver and transmitter power supplies and shall be applied concurrently. Recommended host board power supply filtering isshown in Figure 4 below. Vcc Rx, Vcc1 and Vcc Tx may be internally connected within the QSFP28 transceiver module in any combination. The connector pins areeach rated for a maximum current of 1000mA.

Electrical Pin-Out Details

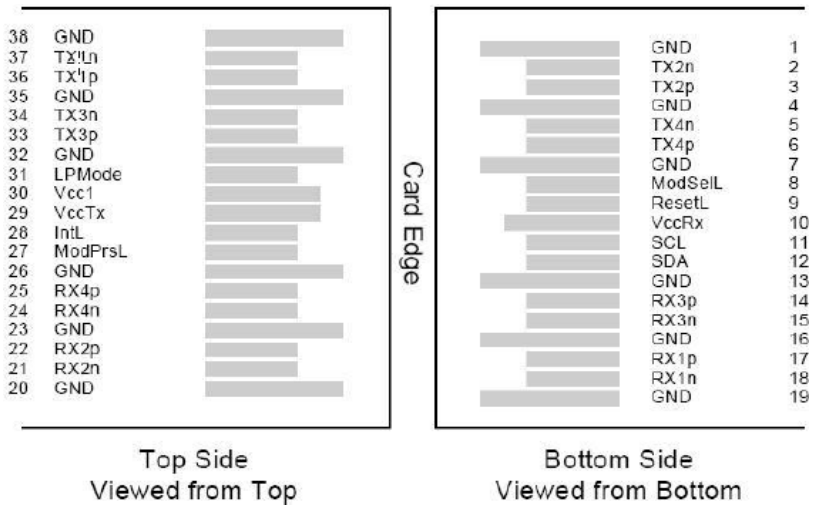

Optical Interface Lanes and Assignments

The orientation of the multi-mode fiber facets of the optical connector

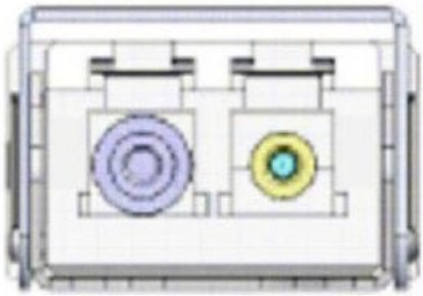

Recommended Power Supply Filter

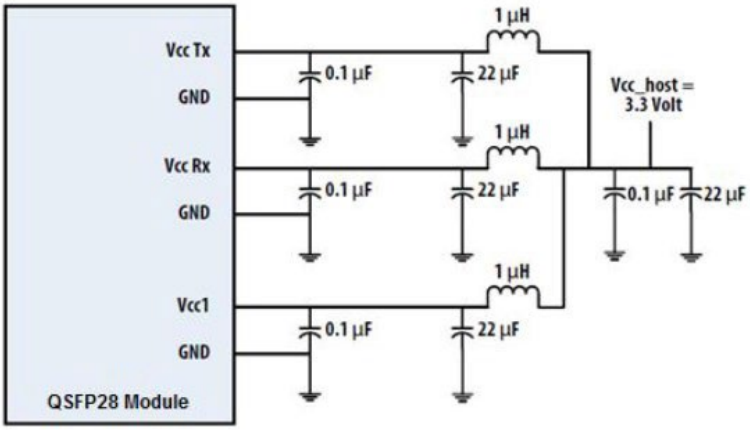

Transceiver Block Diagram

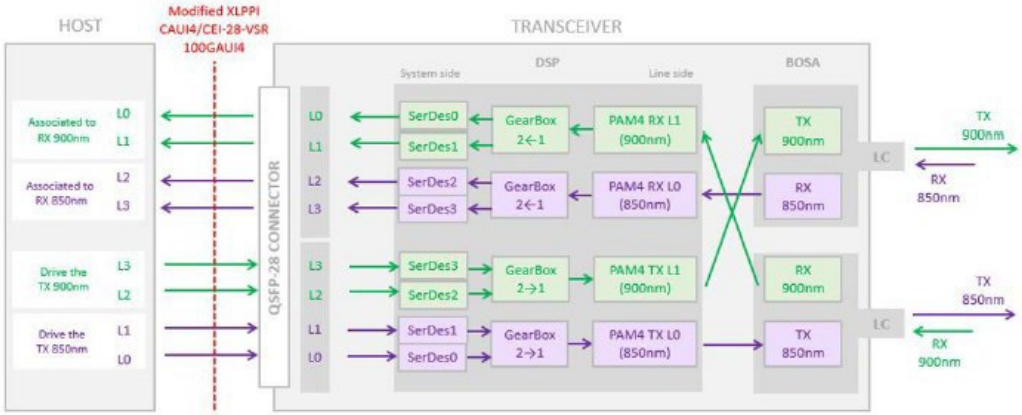

Mechanical Specifications

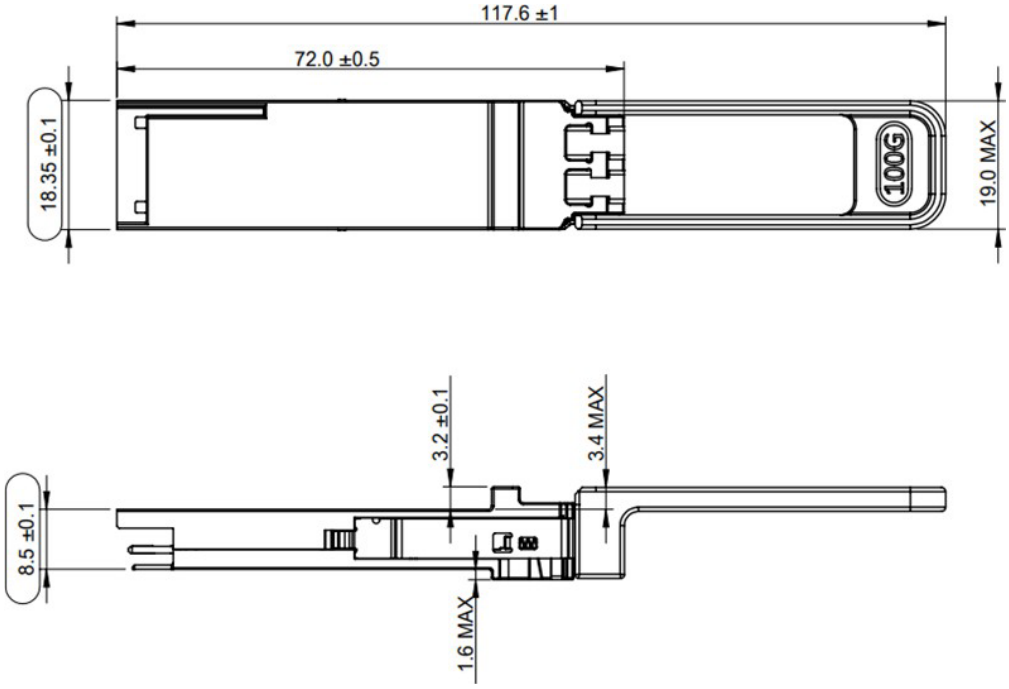

About ProLabs

Our extensive experience comes as standard. For over 20 years ProLabs has delivered optical connectivity solutions that give our customers freedom and choice through our ability to provide seamless interoperability. At the heart of our company is the ability to provide state-of-the-art optical transport and connectivity solutions that are compatible with more than 100 optical switching and transport platforms.

A Complete Portfolio of Network Solutions

ProLabs is focused on innovations in optical transport and connectivity. The combination of our knowledge of optics and networking equipment enables ProLabs to be your single source for optical transport and connectivity solutions from 100Mb to 1.6T while providing innovative solutions that increase network efficiency. We provide the optical connectivity expertise that is compatible with and enhances your switching and transport equipment.

The Trusted Partner

Customer service is our number one value. ProLabs has invested in people, labs and manufacturing capacity to ensure compatible products, and immediate answers to your questions. With Engineering and Manufacturing offices in the U.K. and U.S. augmented by field offices throughout the U.S., U.K. and Asia, ProLabs is able to be our customers best advocate 24 hours a day.

Contact Information

ProLabs US

Email: sales@prolabs.com
Telephone: 952-852-0252

ProLabs UK

Email: salessupport@prolabs.com
Telephone: +44 1285 719 600