REV.	ECN NO.	DATE	SIGN	DESCRIPTION
B	C200793	2020-06-03	JC Chen	B X1

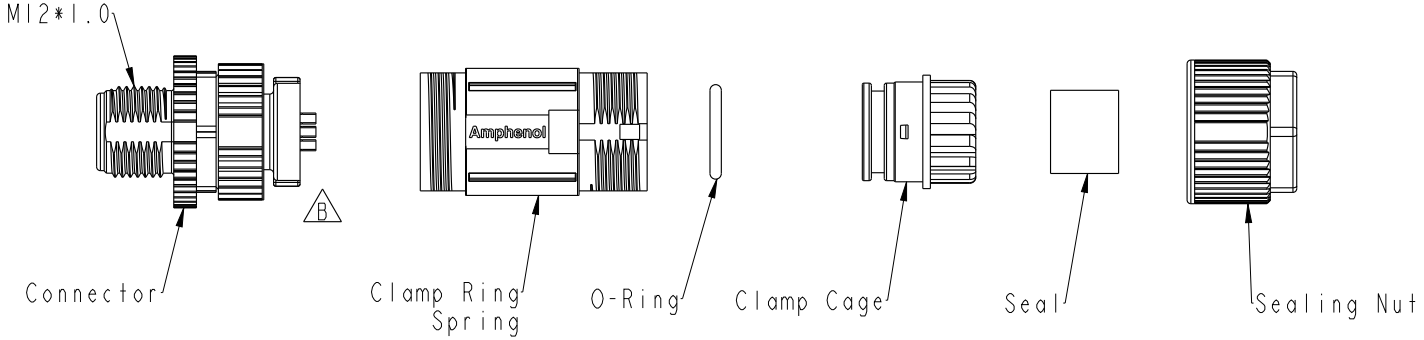

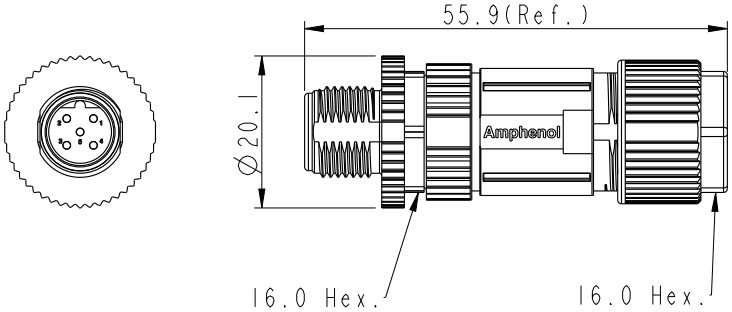

Note:
* QC Important Dimension To Check.
* Waterproof Rate: IP67
* Housing: Thermoplastic, Black.
* Clamp Cage: Thermoplastic, Black.
* Pin: Copper Alloy, Gold Plated.
* Nut: Matel.
* O-Ring: Rubber, Grey.
* Clamp Ring: Matel.
* Sealing Nut: Matel.
* Seal: Rubber, Grey.
* Seal For Cable OD:Ø4.0mm~Ø7.5mm
* Applicable Wire gauge (Stranded wire cross section) 26AWG ~24AWG
* Mating Recommended tightening torque: 3~4 kgf.cm / 0.29~0.39 N.m
* Sealing-Nut Recommended tightening torque: 4~6 kgf.cm / 0.39~0.59 N.m
* Detailed applicable wire specifications may vary depending on the actual wire construction.

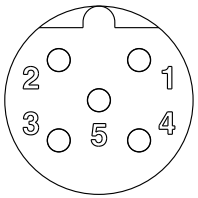

Pin Assignments
Front View

UNIT:mm

TOLERANCE
.X ±0.25
.XX ±0.1
.XXX ±0.05
ANGLES ±1°

TITLE	M12B Shielded Assy M Conn. M Pin		
SCALE 1:1	SIZE A4	SHEET 1 OF 1	
REV. B	WC-REV. A.5	QC: Inspection item	

Amphenol LTW
安費諾亮泰企業股份有限公司

ITEM NO MSBS-05BMMA-SL7001	DRAWN BY JC Chen	DATE 2020-04-18
DWG NO MSBS-05BMMA-SL7001	CHECKED BY Li Feng	DATE 2020-04-18
CUSTOMER ALTW	APPROVED BY Jerry	DATE 2020-04-18

W10814-03-XM01A2

THIS DOCUMENT IS SUBJECT TO CHANGE WITHOUT NOTICE. IT IS CONFIDENTIAL AND A PROPERTY OF Amphenol LTW. DISCLOSURE TO THIRD PARTY HAS TO BE AUTHORIZED BY Amphenol LTW.